The Timken Company
4500 Mt Pleasant St. NW
N. Canton, OH 44720
Phone: (234) 262-3000
E-Mail: CustomerCAD@timken.com • **Web site:** www.timken.com

Timken Part Number VCJT 1 1/8, Two-Bolt Flanged Units Eccentric Locking Collar (Includes Industrial and Standard Series)



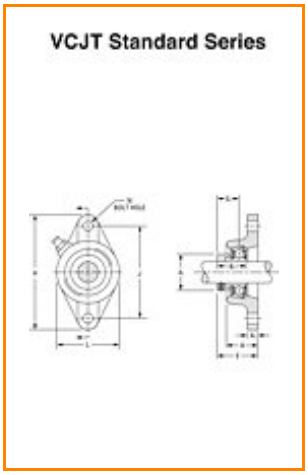

Specifications | Dimensions | Basic Load Ratings

Specifications

Bore Size d	1 1/8 in 28.6 mm
Bearing Number	GRA102RRB
Dimension E	1.854 in 47.1 mm
Inside Ring Outside Diameter	1.720 in 43.7 mm
Series	Standard
Weight	2.262 lb 1.026 Kg
Seal Type	Molded Shroud

Dimensions

Total Width A	29.9 mm 1.177 in
Total Length H	141.3 mm 5.563 in
Total Height L	79.4 mm 3.126 in
Bolt Hole Spacing J	116.7 mm 4.594 in
Bolt Hole Size N	11.5 mm 0.453 in
Flange Thickness A1	11.9 mm 0.469 in
Center of Bearing from Housing End A2	20.1 mm 0.791 in
Inside Ring Width B	35.7 mm 1.406 in
Center of Bearing from Bearing End S	20.1 mm 0.791 in

Basic Load Ratings

Static Load Rating	4900 lbf 21800 N
Dynamic Load Rating	2500 lbf 11100 N

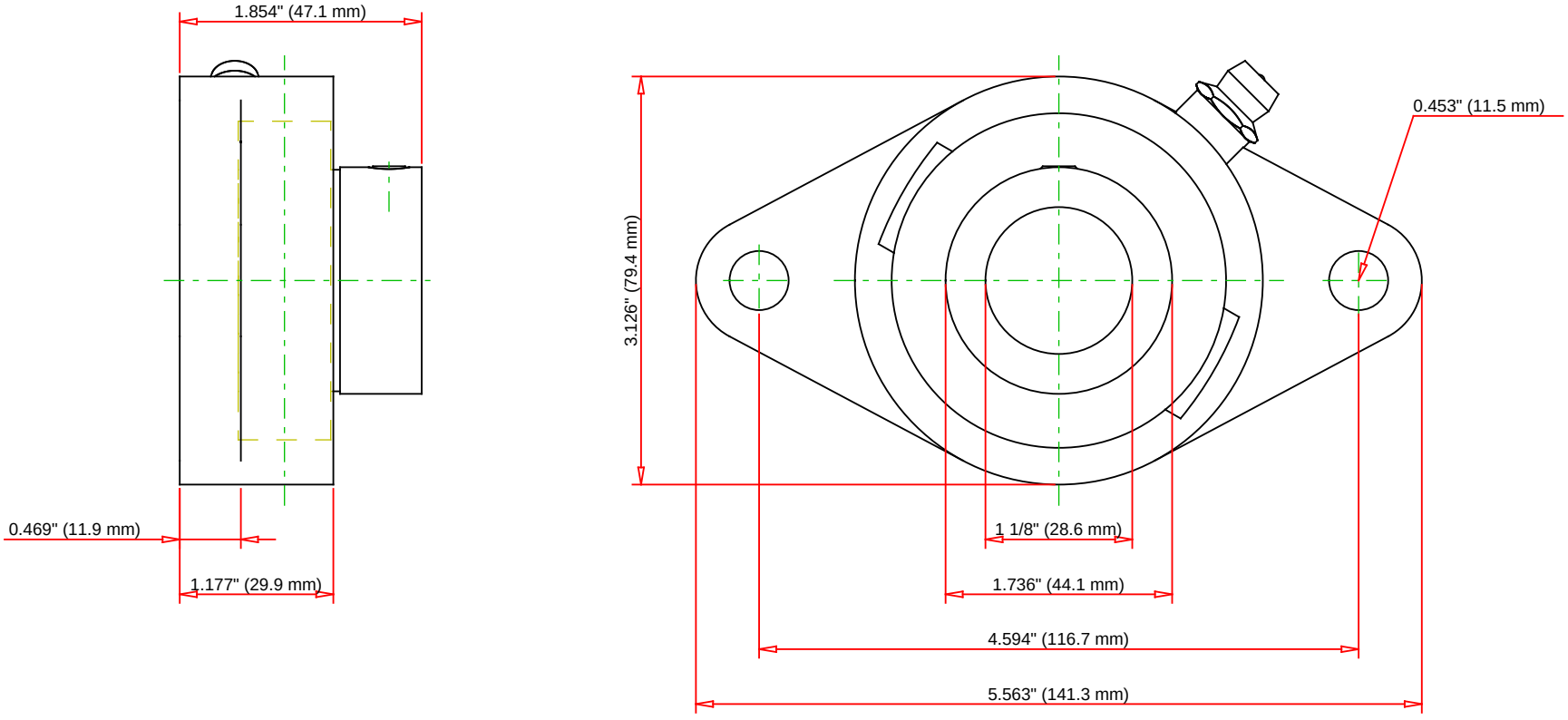

Bearing Number	GRA102RRB				
Load Ratings - C_r	4900	lbf	21800	N	
Load Ratings - C_{0r}	2500	lbf	11100	N	
Weight	2.262	lb	1.026	kg	

TIMKEN

THE TIMKEN COMPANY
NORTH CANTON, OHIO USA

VCJT 1 1/8

Two-Bolt Flanged Units Eccentric Locking Collar
(Includes Industrial and Standard Series)

Every reasonable effort has been made to ensure the accuracy of the information contained in this writing, but no liability is accepted for errors, omissions or for any other reason.

FOR DISCUSSION ONLY