The Timken Company
4500 Mt Pleasant St. NW
N. Canton, OH 44720
Phone: (234) 262-3000
E-Mail: CustomerCAD@timken.com • **Web site:** www.timken.com

Timken Part Number YCJM3 15/16, Four-Bolt Flanged Units Setscrew Locking (Includes Industrial and Standard Series)



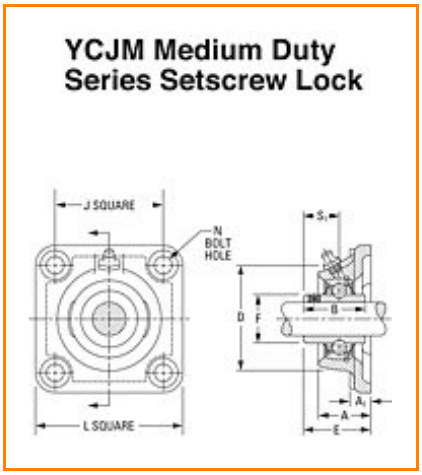

Specifications | Dimensions | Basic Load Ratings

Specifications

Bore Size d	3 15/16 in 100 mm
Bearing Number	GYM1315KRRB
Dimension D	9.252 in 235 mm
Dimension E	5.012 in 127.3 mm
Inside Ring Outside Diameter	5.169 in 131.3 mm
Series	Medium-Duty
Weight	43.6 lb 19.78 Kg

Seal Type	Shroud Seal

Dimensions

Total Length L	268.3 mm 10.563 in
Total Width A	3.756 in 95.4 mm
Bolt Hole Size N	24 mm 0.945 in
Flange Thickness A1	31.8 mm 1.252 in
Center of Bearing from Housing End A2	59 mm 2.323 in
Inside Ring Width B	N/A
Total Height	268.3 mm 10.563 in
Bolt Size	M24
Center of Bearing from Bearing End S	49.05 mm 1.931 in

Basic Load Ratings

Static Load Rating	23500 lbf 104400 N
Dynamic Load Rating	33200 lbf 147500 N

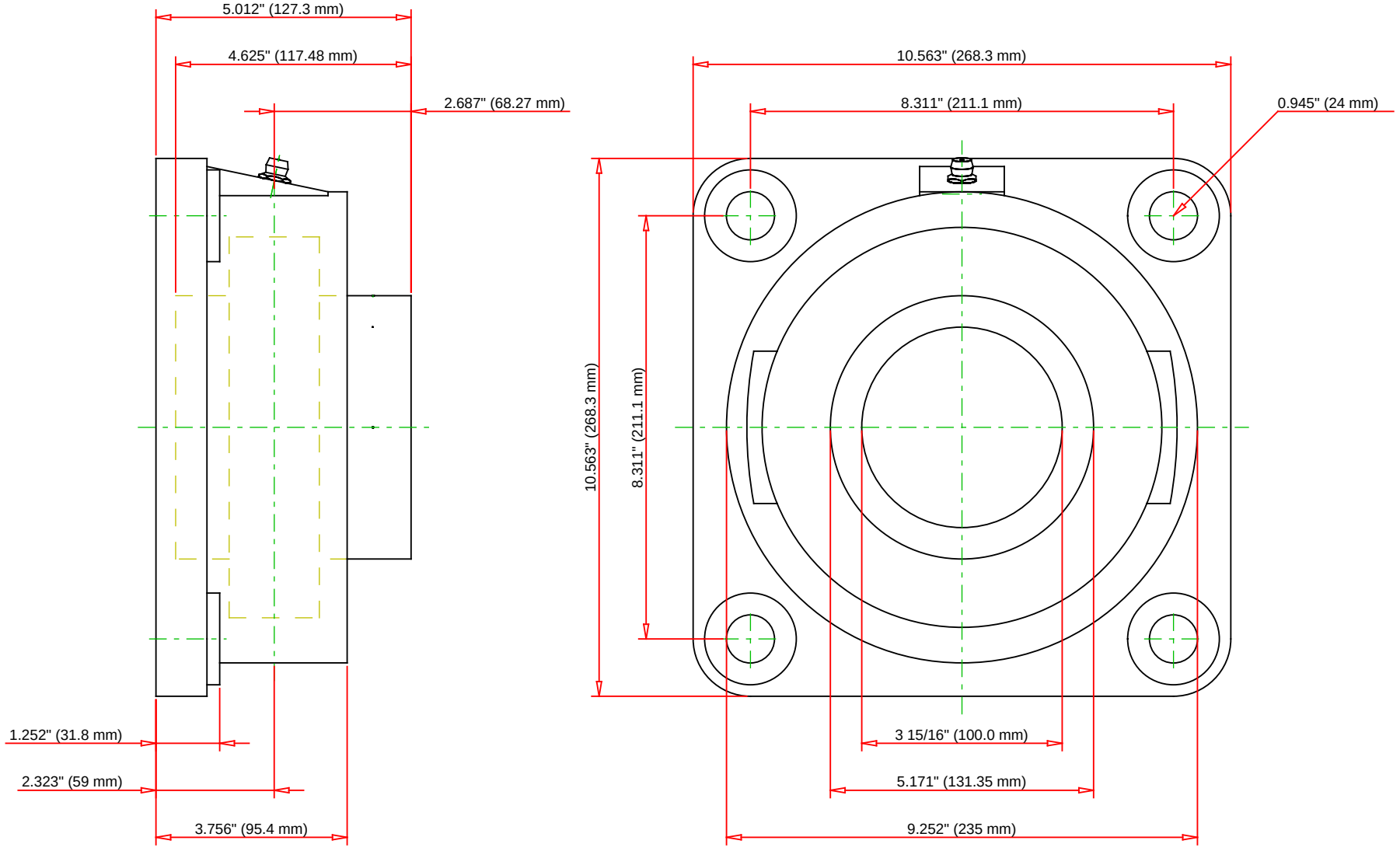

Bearing Number	GYM1315KRRB			
Load Ratings - C_r	33200	lbf	147750	N
Load Ratings - C_{0r}	23500	lbf	104575	N
Weight	0	lb	0	kg
Bolt Size	5/8			

TIMKEN

THE TIMKEN COMPANY
NORTH CANTON, OHIO USA

YCJM3 15/16

Four-Bolt Flanged Units Setscrew Locking
(Includes Industrial and Standard Series)

Every reasonable effort has been made to ensure the accuracy of the information contained in this writing, but no liability is accepted for errors, omissions or for any other reason.

FOR DISCUSSION ONLY