The Timken Company
4500 Mt Pleasant St. NW
N. Canton, OH 44720
Phone: (234) 262-3000
E-Mail: CustomerCAD@timken.com • **Web site:** www.timken.com

Timken Part Number MB 10, Metric Lockwasher

No. AW 00 - AW 40 also available for 304 stainless steel.
Note: The specifications of AW can be applied for MB.

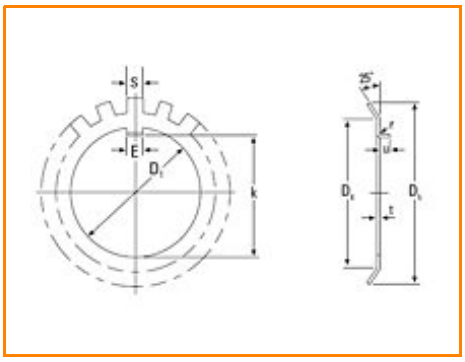

Specifications

D_1	50 mm
k	47.5 mm
E	6 mm
t	1.2 mm
S^1	6.0 mm
D_4	61 mm
D_5	74 mm
r	1.0 mm
u	2.5 mm
No. of Tangs	17
Locknut	KM 10

Weight per 100 pieces	1.600 Kg

[1] Tolerance -0 to + 0.4 mm (-0 to +1/64 in)