The Timken Company
4500 Mt Pleasant St. NW
N. Canton, OH 44720
Phone: (234) 262-3000
E-Mail: CustomerCAD@timken.com • **Web site:** www.timken.com

Timken Part Number HM926747 - HM926710, Tapered Roller Bearings - TS (Tapered Single) Imperial

This is the most basic and most widely used type of tapered roller bearing. It consists of two main separable parts: the cone (inner ring) assembly and the cup (outer ring). It is typically mounted in opposing pairs on a shaft.



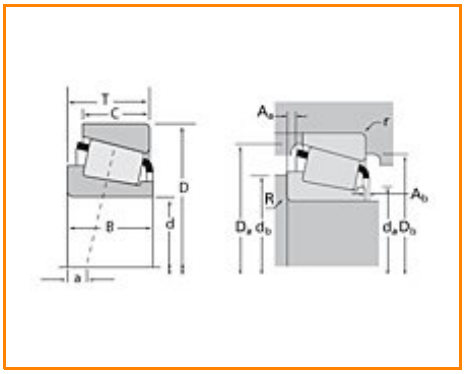

Specifications | Dimensions | Abutment and Fillet Dimensions | Basic Load Ratings | Factors

Specifications

Series	HM926700
Cone Part Number	HM926747
Cup Part Number	HM926710
Design Units	Imperial
Bearing Weight	8.60 Kg 19.000 lb
Cage Type	Stamped Steel

Dimensions

d - Bore	127 mm 5 in
D - Cup Outer Diameter	228.600 mm 9.0000 in
B - Cone Width	49.428 mm 1.9460 in
C - Cup Width	38.100 mm 1.5000 in
T - Bearing Width	53.975 mm 2.1250 in

Abutment and Fillet Dimensions

R - Cone Backface "To Clear" Radius[1]	3.560 mm 0.14 in
r - Cup Backface "To Clear" Radius[2]	3.30 mm 0.130 in
da - Cone Frontface Backing Diameter	143.00 mm 6.57 in
db - Cone Backface Backing Diameter	155.96 mm 6.14 in
Da - Cup Frontface Backing Diameter	219.50 mm 8.64 in
Db - Cup Backface Backing Diameter	199.90 mm 7.87 in
Ab - Cage-Cone Frontface Clearance	7.4 mm 0.29 in
Aa - Cage-Cone Backface Clearance	7.9 mm 0.31 in
a - Effective Center Location[3]	13.50 mm 0.53 in

Basic Load Ratings

C90 - Dynamic Radial Rating (90 million revolutions)[4]	152000 N 34200 lbf
C1 - Dynamic Radial Rating (1 million revolutions)[5]	586000 N 132000 lbf
C0 - Static Radial Rating	673000 N 151000 lbf
C_{a90} - Dynamic Thrust Rating (90 million revolutions)[6]	192000 N 43100 lbf

Factors

K - Factor[7]	0.79
e - ISO Factor[8]	0.74
Y - ISO Factor[9]	0.81
G1 - Heat Generation Factor (Roller-Raceway)	295
G2 - Heat Generation Factor (Rib-Roller End)	39
Cg - Geometry Factor	0.142

[1] These maximum fillet radii will be cleared by the bearing corners.

[2] These maximum fillet radii will be cleared by the bearing corners.

[3] Negative value indicates effective center inside cone backface.

[4] Based on 90 x 10^6 revolutions L_{10} life, for The Timken Company life calculation method. C_{90} and C_{a90} are radial and thrust values.

[5] Based on 1 x 10^6 revolutions L_{10} life, for the ISO life calculation method.

[6] Based on 90 x 10^6 revolutions L_{10} life, for The Timken Company life calculation method. C_{90} and C_{a90} are radial and thrust values for a single-row, $C_{90(2)}$ is the two-row radial value.

[7] These factors apply for both inch and metric calculations. Consult your Timken representative for instruction on use.

[8] These factors apply for both inch and metric calculations. Consult your Timken representative for instruction

on use.

[9] These factors apply for both inch and metric calculations. Consult your Timken representative for instruction on use.

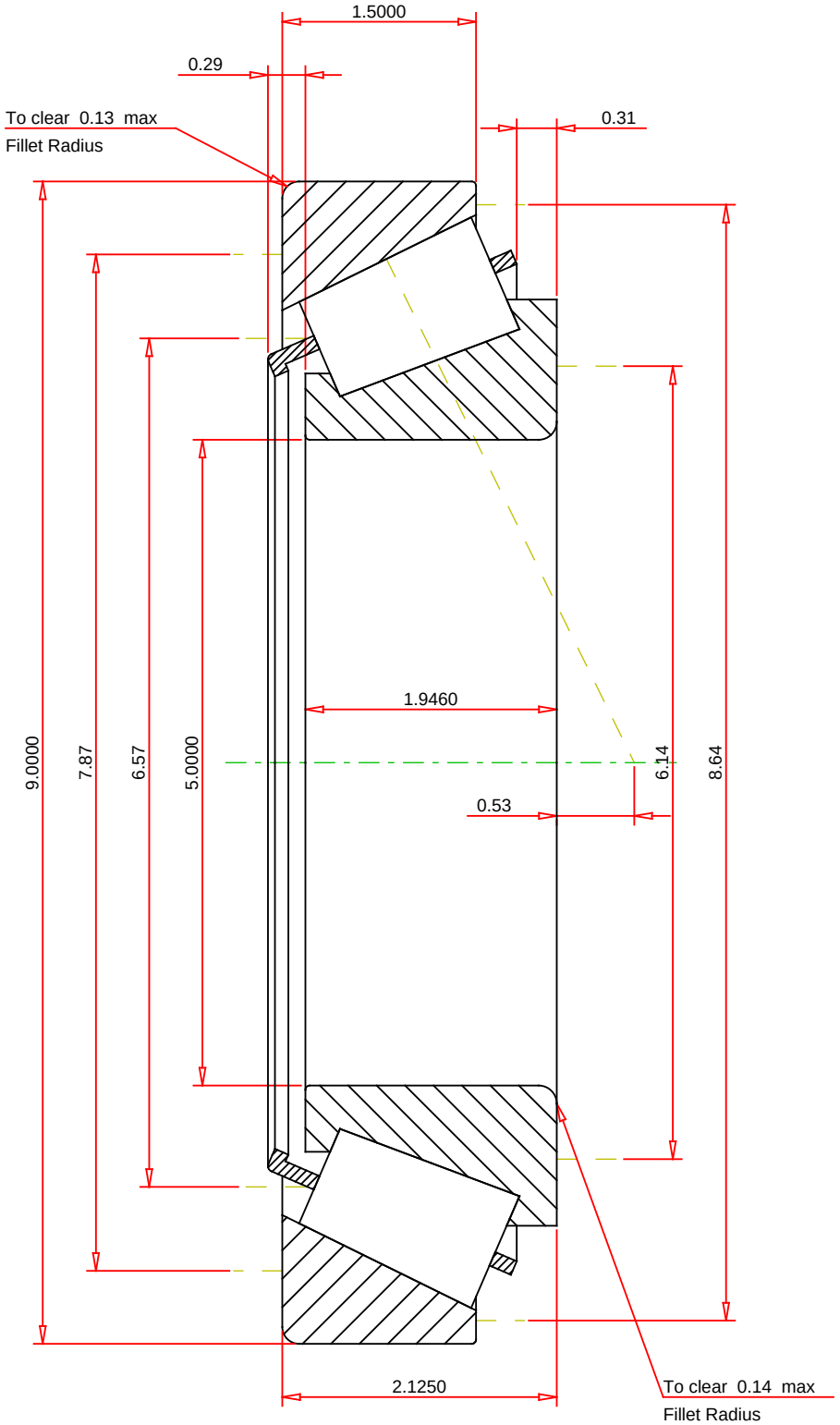

IMPERIAL UNITS

ISO Factor - e	0.74	
ISO Factor - Y	0.81	
Bearing Weight	19	lb
Number of Rollers Per Row	20	
Effective Center Location	0.53	inch

TIMKEN®

THE TIMKEN COMPANY
NORTH CANTON, OHIO USA

HM926747 - HM926710
TS BEARING ASSEMBLY

K Factor	0.79	
Dynamic Radial Rating - C90	152000	lbf
Dynamic Thrust Rating - Ca90	192000	lbf
Static Radial Rating - C0	673000	lbf
Dynamic Radial Rating - C1	586000	lbf

Every reasonable effort has been made to ensure the accuracy of the information contained in this writing, but no liability is accepted for errors, omissions or for any other reason.

FOR DISCUSSION ONLY