The Timken Company
4500 Mt Pleasant St. NW
N. Canton, OH 44720
Phone: (234) 262-3000
E-Mail: CustomerCAD@timken.com • **Web site:** www.timken.com

Part Number YCJM2 11/16, Fafnir® Four-Bolt Flanged Units Setscrew Locking



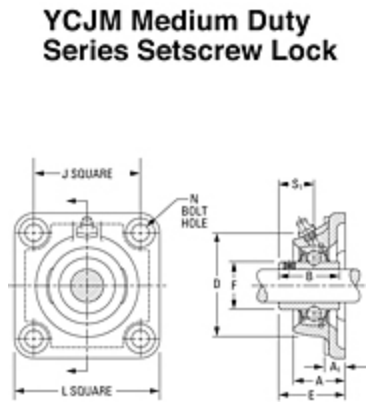

Specifications | Dimensions | Basic Load Ratings

Specifications

Shaft Size d	2 11/16 in 68.3 mm
Bearing Number	GYM1211KRRB
Dimension D	6.374 in 161.9 mm
Dimension E	3.394 in 86.2 mm
Inside Ring Outside Diameter	3.619 in 91.92 mm
Series	Medium-Duty
Weight	18.98 lb 8.61 Kg
Seal Type	Shroud Seal

Housing Construction	Four-Bolt Square Flange
Alternate Part Name	YCJM211/16

Dimensions

Total Length L	196.8 mm 7.748 in
Housing Width A	2.626 in 66.7 mm
Bolt Hole Size N	20.00 mm 0.787 in
Flange Thickness A1	22.2 mm 0.874 in
Center of Bearing from Housing End A2	41.8 mm 1.646 in
Inside Ring Width B	N/A
Total Height	196.8 mm 7.748 in
Bolt Size	M20
Center of Bearing from Bearing End S	33.4 mm 1.315 in

Basic Load Ratings

Static Load Rating	10100 lbf 44800 N
Dynamic Load Rating	15500 lbf 68900 N

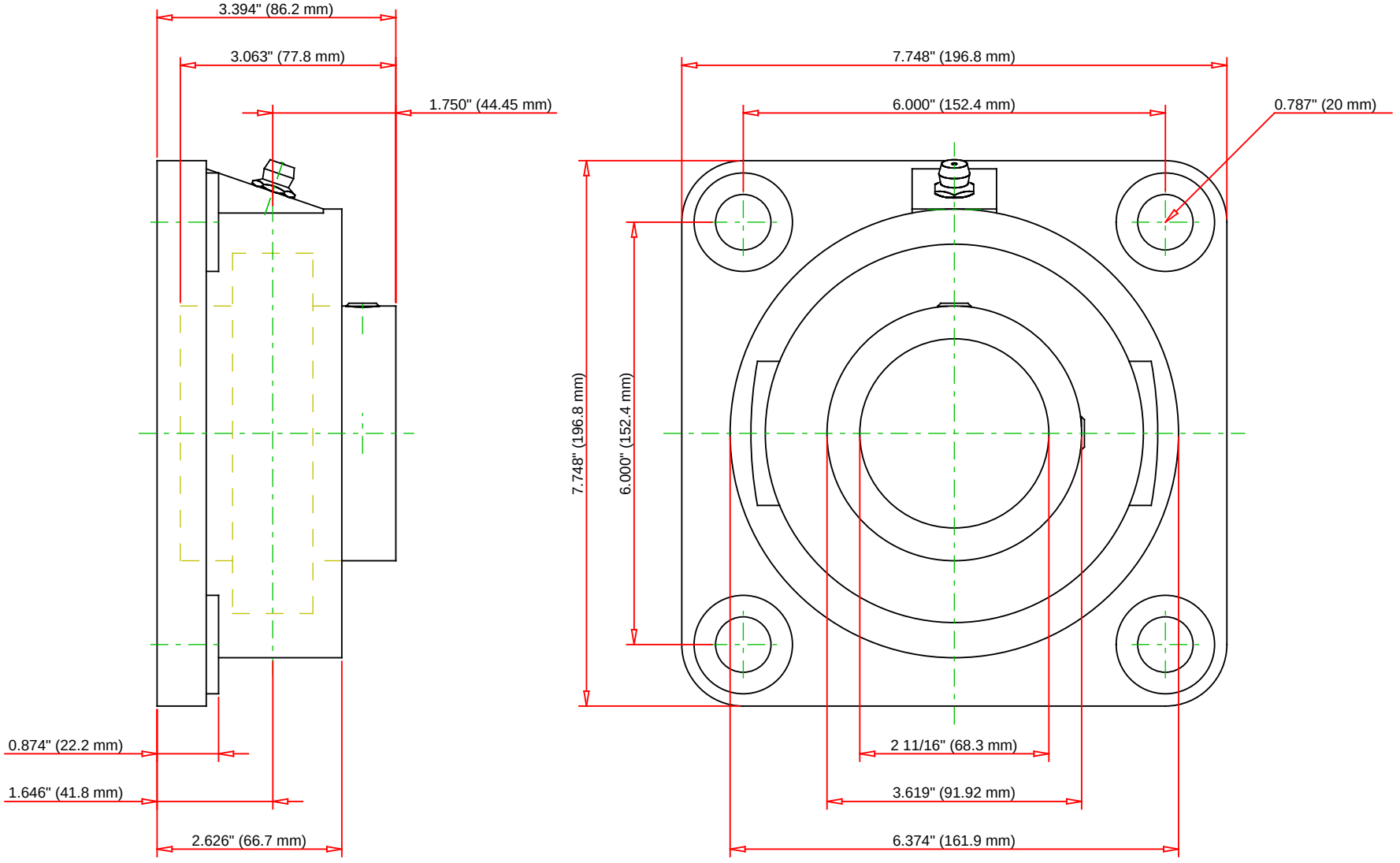

Bearing Number	GYM1211KRRB			
Load Ratings - C_r	15600	lbf	69500	N
Load Ratings - C_{0r}	9800	lbf	43600	N
Weight	0	lb	0	kg
Bolt Size	M12x1.75			

TIMKEN

THE TIMKEN COMPANY
NORTH CANTON, OHIO USA

YCJM2 11/16

Fafnir® Four-Bolt Flanged Units Setscrew Locking

Every reasonable effort has been made to ensure the accuracy of the information contained in this writing, but no liability is accepted for errors, omissions or for any other reason.

FOR DISCUSSION ONLY