The Timken Company
4500 Mt Pleasant St. NW
N. Canton, OH 44720
Phone: (234) 262-3000
E-Mail: CustomerCAD@timken.com • **Web site:** www.timken.com

Part Number YCJM1 11/16, Fafnir® Four-Bolt Flanged Units Setscrew Locking



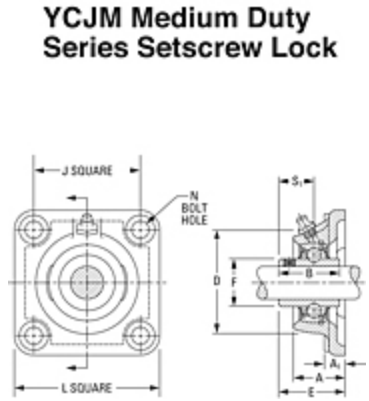

Specifications | Dimensions | Basic Load Ratings

Specifications

Shaft Size d	1 11/16 in 42.9 mm
Bearing Number	GYM1111KRRB
Dimension D	4.437 in 112.7 mm
Dimension E	2.390 in 60.7 mm
Inside Ring Outside Diameter	2.474 in 62.84 mm
Series	Medium-Duty
Weight	7.27 lb 3.3 Kg
Seal Type	Shroud Seal

Housing Construction	Four-Bolt Square Flange
Alternate Part Name	YCJM111/16

Dimensions

Total Length L	142.9 mm 5.626 in
Housing Width A	1.689 in 42.9 mm
Bolt Hole Size N	16 mm 0.630 in
Flange Thickness A1	14.3 mm 0.563 in
Center of Bearing from Housing End A2	28.2 mm 1.110 in
Inside Ring Width B	N/A
Total Height	142.9 mm 5.626 in
Bolt Size	M16
Center of Bearing from Bearing End S	19.1 mm 0.752 in

Basic Load Ratings

Static Load Rating	5210 lbf 23200 N
Dynamic Load Rating	8740 lbf 38900 N

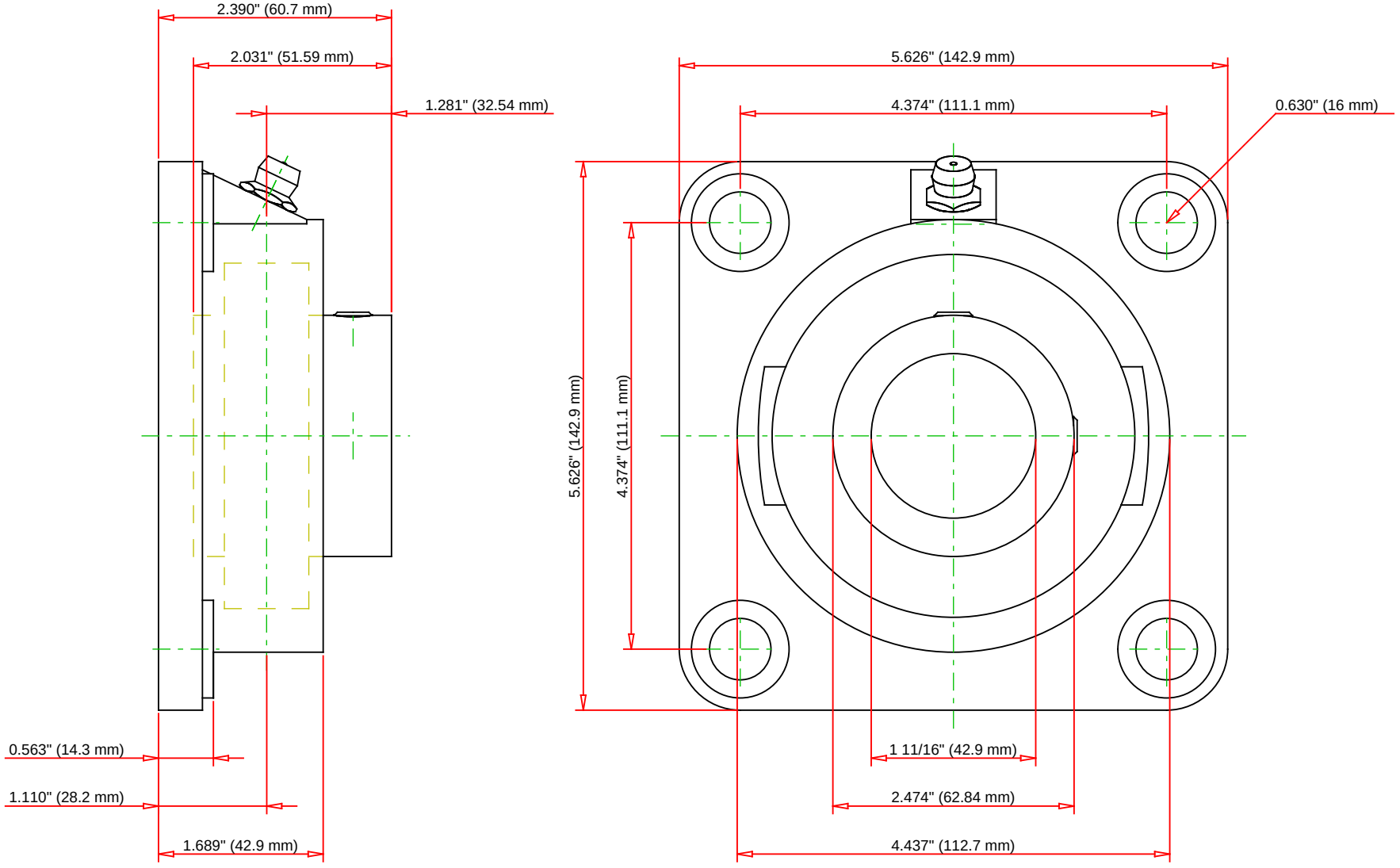

Bearing Number	GYM1111KRRB			
Load Ratings - C_r	8800	lbf	39200	N
Load Ratings - C_{0r}	5100	lbf	22700	N
Weight	0	lb	0	kg
Bolt Size	M10x1.5			

TIMKEN

THE TIMKEN COMPANY
NORTH CANTON, OHIO USA

YCJM1 11/16

Fafnir® Four-Bolt Flanged Units Setscrew Locking

Every reasonable effort has been made to ensure the accuracy of the information contained in this writing, but no liability is accepted for errors, omissions or for any other reason.

FOR DISCUSSION ONLY