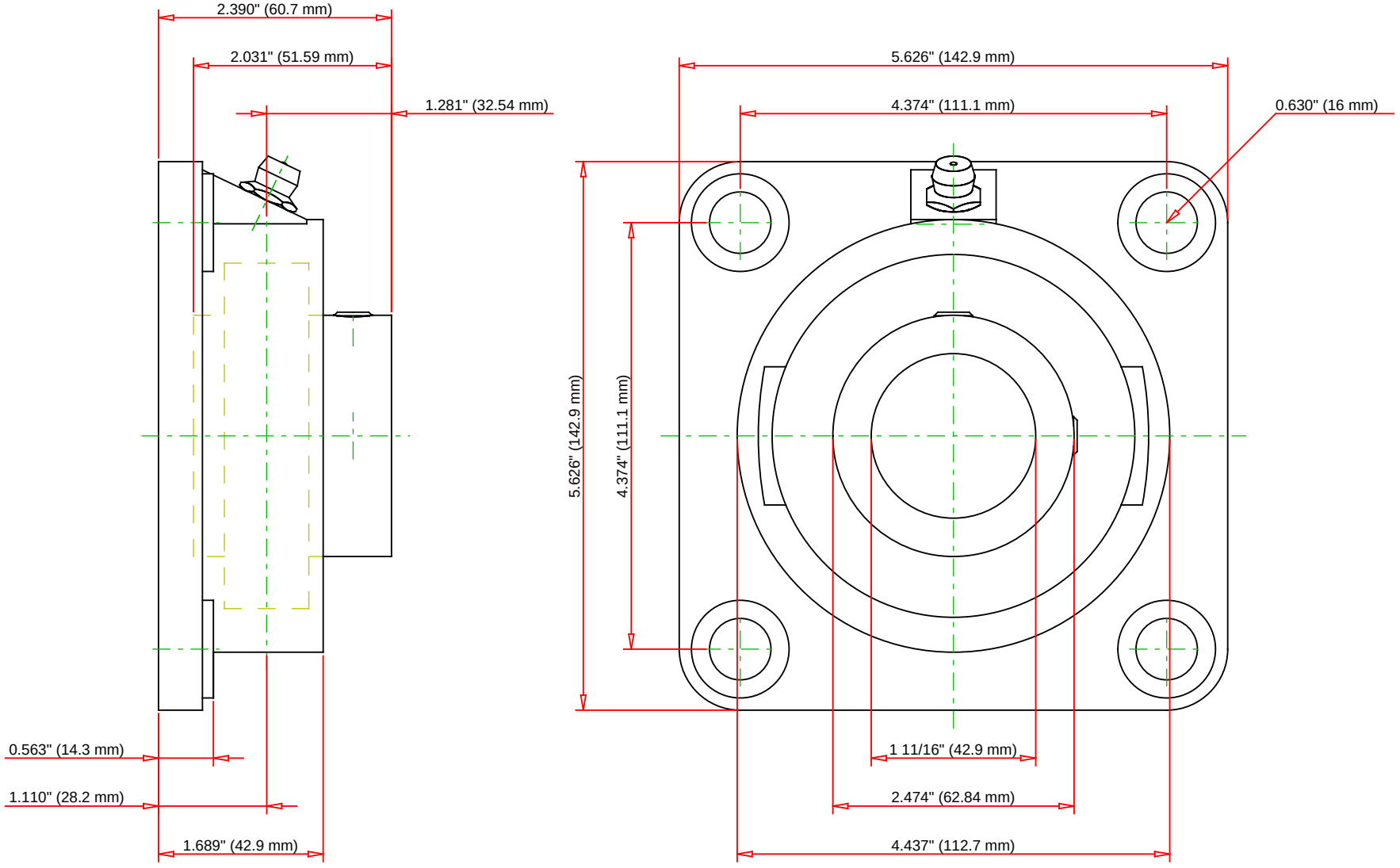

Bearing Number	GYM1111KRRB			
Load Ratings - C_r	8800	lbf	39200	N
Load Ratings - C_{0r}	5100	lbf	22700	N
Weight	0	lb	0	kg
Bolt Size	M10x1.5			

TIMKEN

THE TIMKEN COMPANY
NORTH CANTON, OHIO USA

YCJM1 11/16

Fafnir® Four-Bolt Flanged Units Setscrew Locking

Every reasonable effort has been made to ensure the accuracy of the information contained in this writing, but no liability is accepted for errors, omissions or for any other reason.

FOR DISCUSSION ONLY