The Timken Company
4500 Mt Pleasant St. NW
N. Canton, OH 44720
Phone: (234) 262-3000
E-Mail: CustomerCAD@timken.com • **Web site:** www.timken.com

Timken Part Number AN 26-W 26, Inch Accessories - Locknut and Lockwasher

- The chart below shows dimensions for locknuts and lockwashers used in the mounting of straight bore bearings on shafts.
- Other dimensions and tolerances related to shaft configurations are also shown.
- Dimensions are presented according to bearing bore size and are applicable to bearings in the various series (e.g., 222 and 223 etc.).

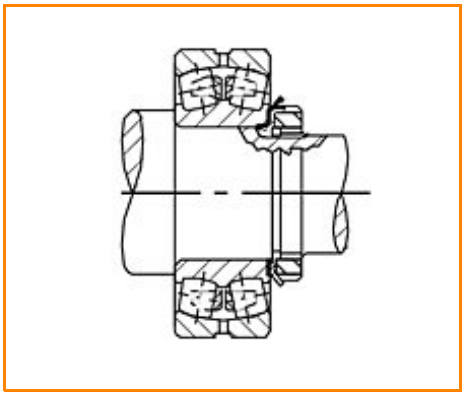

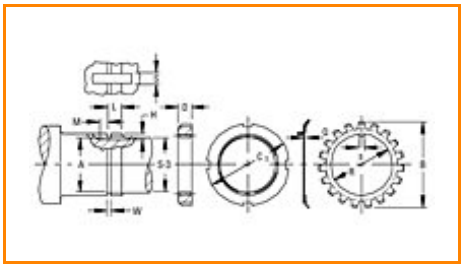

Specifications | Threads | Shaft | Locknut | Lockwasher

Specifications

Bearing Bore	130 mm
Threads No. per Inch	12
Locknut	AN 26
Lockwasher	W 26

Threads

Max. Major Diameter	129.69 mm 5.106 in

Min. Major Diameter	129.41 mm 5.0948 in
Max. Pitch Diameter	128.32 mm 5.0519 in
Min. Pitch Diameter	128.11 mm 5.0436 in
Minor Diameter	127.10 mm 5.0038 in

Shaft

Relief Diameter A	126.30 mm 4.9725 in
Diameter S-3	125.41 mm 4 15/16 in
W[1]	4.0 mm 5/32 in
L[2]	25.40 mm 1.0000 in
H[3]	4.8 mm 3/16 in
S[4]	11.1 mm 12.7 mm 0.435 in 1/2 in
M[5]	7.90 mm 5/16 in

Locknut

C_1	171.50 mm 6 3/4 in

D	22.50 mm 0.8850 in

Lockwasher

Q	3.20 mm 0.125 in
R	132.7 mm 5.226 in
B	178.60 mm 7 1/32 in

[1] Tolerance -0 to + 0.4 mm (-0 to +1/64 in)
[2] Tolerance -0 to + 0.4 mm (-0 to +1/64 in)
[3] Tolerance -0 to + 0.4 mm (-0 to +1/64 in)
[4] Tolerance -0 to + 0.4 mm (-0 to +1/64 in)
[5] Tolerance -0 to + 0.4 mm (-0 to +1/64 in)