The Timken Company
4500 Mt Pleasant St. NW
N. Canton, OH 44720
Phone: (234) 262-3000
E-Mail: CustomerCAD@timken.com • **Web site:** www.timken.com

Timken Part Number JHM720249 - JHM720210, Tapered Roller Bearings - TS (Tapered Single) Metric

This is the most basic and most widely used type of tapered roller bearing. It consists of two main separable parts: the cone (inner ring) assembly and the cup (outer ring). It is typically mounted in opposing pairs on a shaft.



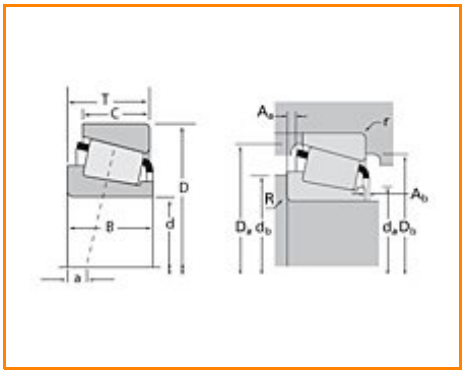

Specifications | Dimensions | Abutment and Fillet Dimensions | Basic Load Ratings | Factors

Specifications

Series	HM720200
Cone Part Number	JHM720249
Cup Part Number	JHM720210
Design Units	METRIC
Bearing Weight	3.000 Kg 6.60 lb
Cage Type	Stamped Steel

Dimensions

d - Bore	100 mm 3.937 in
D - Cup Outer Diameter	160.000 mm 6.2992 in
B - Cone Width	40.000 mm 1.5748 in
C - Cup Width	32.000 mm 1.2598 in
T - Bearing Width	41.000 mm 1.6142 in

Abutment and Fillet Dimensions

R - Cone Backface "To Clear" Radius[1]	3.050 mm 0.12 in
r - Cup Backface "To Clear" Radius[2]	2.54 mm 0.1 in
da - Cone Frontface Backing Diameter	109.22 mm 4.30 in
db - Cone Backface Backing Diameter	117.09 mm 4.61 in
Da - Cup Frontface Backing Diameter	154.43 mm 6.08 in
Db - Cup Backface Backing Diameter	143.00 mm 5.63 in
Ab - Cage-Cone Frontface Clearance	4.3 mm 0.17 in
Aa - Cage-Cone Backface Clearance	2.8 mm 0.11 in
a - Effective Center Location[3]	-2.5 mm -0.1 in

Basic Load Ratings

C90 - Dynamic Radial Rating (90 million revolutions)[4]	72400 N 16300 lbf
C1 - Dynamic Radial Rating (1 million revolutions)[5]	279000 N 62800 lbf
C0 - Static Radial Rating	416000 N 93500 lbf
C_{a90} - Dynamic Thrust Rating (90 million revolutions)[6]	58300 N 13100 lbf

Factors

K - Factor[7]	1.24
e - ISO Factor[8]	0.47
Y - ISO Factor[9]	1.28
G1 - Heat Generation Factor (Roller-Raceway)	188
G2 - Heat Generation Factor (Rib-Roller End)	45.5
Cg - Geometry Factor	0.107

[1] These maximum fillet radii will be cleared by the bearing corners.

[2] These maximum fillet radii will be cleared by the bearing corners.

[3] Negative value indicates effective center inside cone backface.

[4] Based on 90 x 10^6 revolutions L_{10} life, for The Timken Company life calculation method. C_{90} and C_{a90} are radial and thrust values.

[5] Based on 1 x 10^6 revolutions L_{10} life, for the ISO life calculation method.

[6] Based on 90 x 10^6 revolutions L_{10} life, for The Timken Company life calculation method. C_{90} and C_{a90} are radial and thrust values for a single-row, $C_{90(2)}$ is the two-row radial value.

[7] These factors apply for both inch and metric calculations. Consult your Timken representative for instruction on use.

[8] These factors apply for both inch and metric calculations. Consult your Timken representative for instruction

on use.

[9] These factors apply for both inch and metric calculations. Consult your Timken representative for instruction on use.

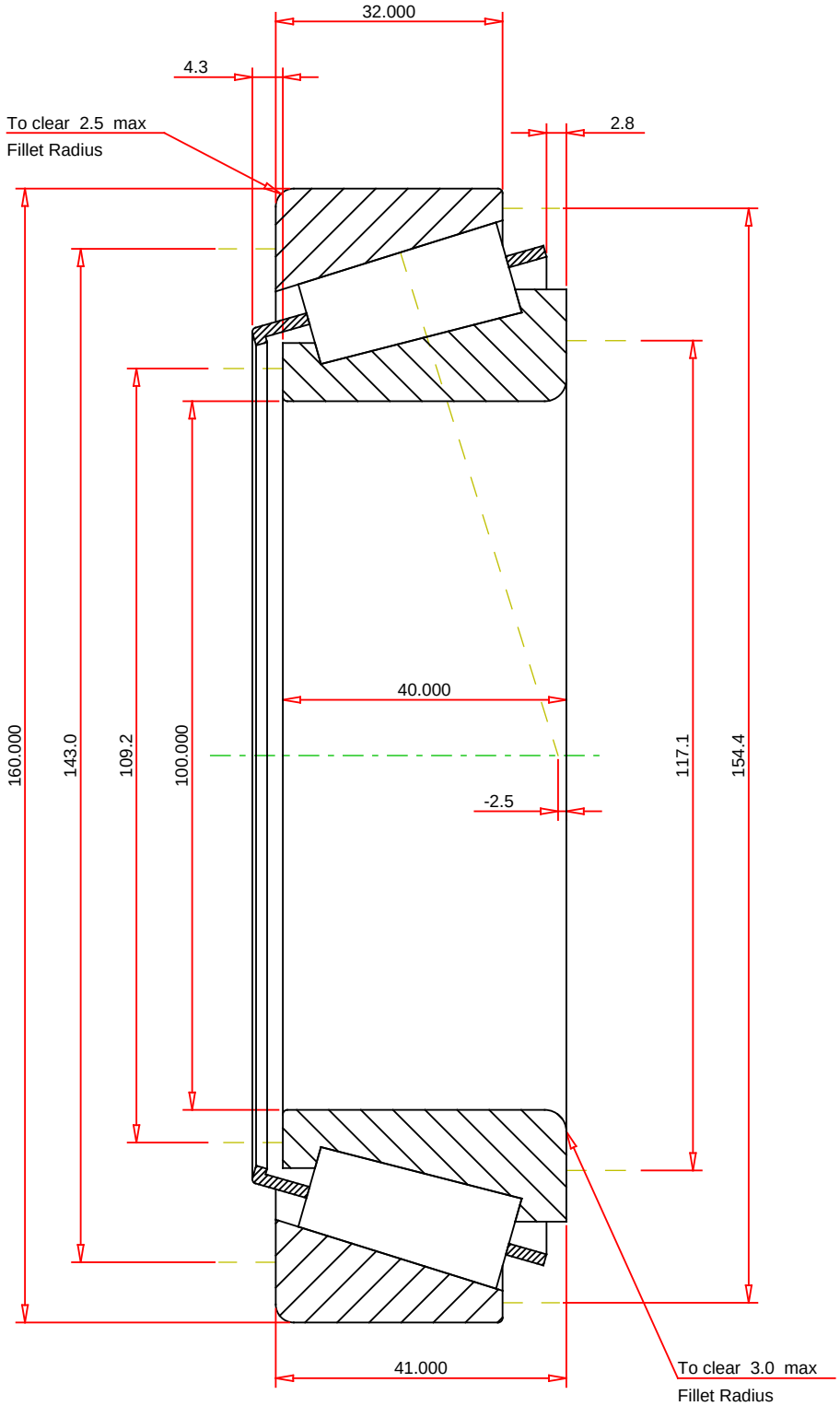

METRIC UNITS

ISO Factor - e	0.47	
ISO Factor - Y	1.28	
Bearing Weight	3	kg
Number of Rollers Per Row	23	
Effective Center Location	-2.5	mm

TIMKEN®

THE TIMKEN COMPANY
NORTH CANTON, OHIO USA

JHM720249 - JHM720210
TS BEARING ASSEMBLY

K Factor	1.24	
Dynamic Radial Rating - C90	72400	N
Dynamic Thrust Rating - Ca90	58300	N
Static Radial Rating - C0	416000	N
Dynamic Radial Rating - C1	279000	N

Every reasonable effort has been made to ensure the accuracy of the information contained in this writing, but no liability is accepted for errors, omissions or for any other reason.

FOR DISCUSSION ONLY