**The Timken Company**
4500 Mt Pleasant St. NW
N. Canton, OH 44720
**Phone:** (234) 262-3000
**E-Mail:** CustomerCAD@timken.com • **Web site:** www.timken.com

# Timken Part Number SNW-111 x 1 15/16, SNW/SNP – Pull-Type Sleeve, Locknut, Lockwasher/Lockplate Assemblies

- The table below shows dimensions for adapter assemblies and components used in the mounting of tapered bore bearings on shafts.
- SNW assembly consists of a sleeve, locknut and lockwasher.
- SNP assembly consists of a sleeve, locknut and lockplate.



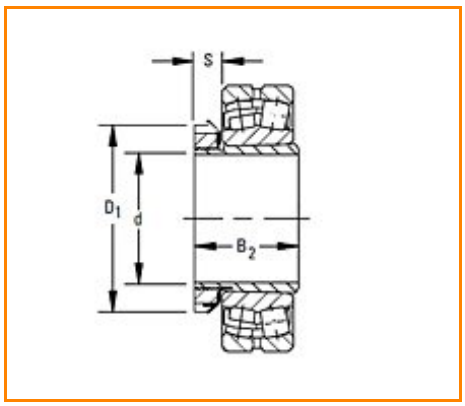


Specifications | Shaft Dimensions | Adapter Dimensions | Accessory Numbers

## Specifications

| | |
|---|---|
| **Series** | 223K and 232K |
| **Diameter d** | 1 15/16 in |
| **Bearing Number** | 22311K |
| **SNW/SNP Assembly Weight** | 0.90 lb |

## Shaft Dimensions

| | |
|---|---|
| **Tolerance**[1] | -0.003 in |

## Adapter Dimensions

| | |
|---|---|
| $B_2$ | 2 33/64 in |
| $S^2$ | 9/16 in |
| $D_1$ | 2 31/32 in |

## Accessory Numbers

| | |
|---|---|
| **Sleeve** | S-111 |
| **Locknut** | N-11 |
| **Lockwasher and Lockplates** | W-11 |

[1] Tolerance range is from +0 to value listed.
[2] Tolerance -0 to + 0.4 mm (-0 to +1/64 in)