The Timken Company
4500 Mt Pleasant St. NW
N. Canton, OH 44720
Phone: (234) 262-3000
E-Mail: CustomerCAD@timken.com • **Web site:** www.timken.com

Timken Part Number HA2322, Metric HA Adapter Sleeve for Inch Shaft

- Safe and effective tapered bore bearing assembly.
- Includes mounting sleeve, locknut and lockwasher or lockplate.
- Other dimensions may be available, consult your Timken sales representative.

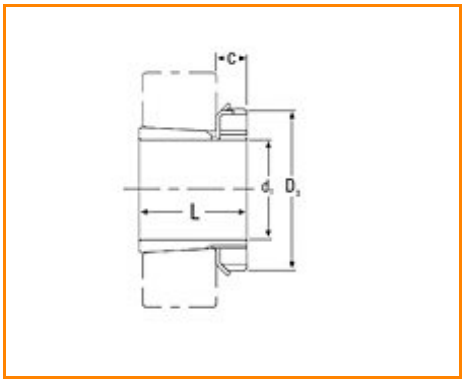

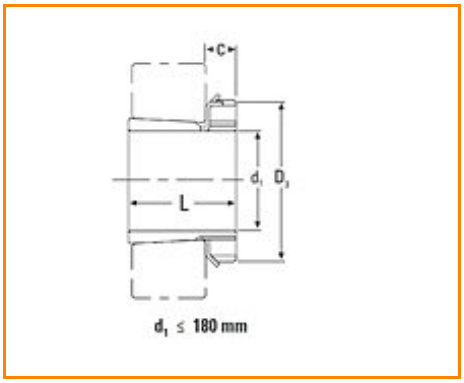

Specifications

d1	3 15/16 in 100.01 mm
L[1]	105.00 mm
C	21.0 mm
G	M110x2
D_3	145 mm
Locknut	KM22
Lockwasher and Lockplates	MB22
Appropriate Hydraulic Nut	HMV22

[1] Tolerance -0 to + 0.4 mm (-0 to +1/64 in)