The Timken Company
4500 Mt Pleasant St. NW
N. Canton, OH 44720
Phone: (234) 262-3000
E-Mail: CustomerCAD@timken.com • **Web site:** www.timken.com

Timken Part Number L433749 - L433710, Tapered Roller Bearings - TS (Tapered Single) Imperial

This is the most basic and most widely used type of tapered roller bearing. It consists of two main separable parts: the cone (inner ring) assembly and the cup (outer ring). It is typically mounted in opposing pairs on a shaft.



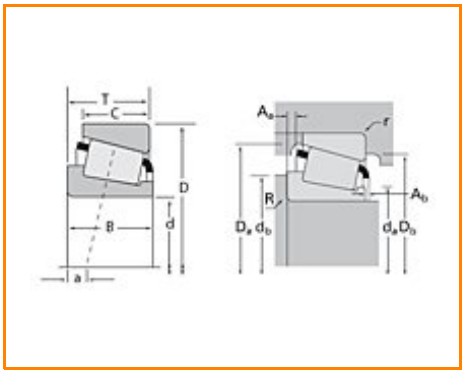

Specifications | Dimensions | Abutment and Fillet Dimensions | Basic Load Ratings | Factors

Specifications

Series	L433700
Cone Part Number	L433749
Cup Part Number	L433710
Design Units	Imperial
Bearing Weight	2.400 Kg 5.20 lb
Cage Type	Stamped Steel

Dimensions

d - Bore	165.1 mm 6.5 in
D - Cup Outer Diameter	215.900 mm 8.5000 in
B - Cone Width	26.195 mm 1.0313 in
C - Cup Width	20.638 mm 0.8125 in
T - Bearing Width	26.195 mm 1.0313 in

Abutment and Fillet Dimensions

R - Cone Backface "To Clear" Radius[1]	1.520 mm 0.06 in
r - Cup Backface "To Clear" Radius[2]	1.52 mm 0.06 in
da - Cone Frontface Backing Diameter	171.96 mm 7.60 in
db - Cone Backface Backing Diameter	173.99 mm 6.85 in
Da - Cup Frontface Backing Diameter	210.80 mm 8.30 in
Db - Cup Backface Backing Diameter	204.98 mm 8.07 in
Ab - Cage-Cone Frontface Clearance	2.3 mm 0.09 in
Aa - Cage-Cone Backface Clearance	2 mm 0.08 in
a - Effective Center Location[3]	8.6 mm 0.34 in

Basic Load Ratings

C90 - Dynamic Radial Rating (90 million revolutions)[4]	46300 N 10400 lbf
C1 - Dynamic Radial Rating (1 million revolutions)[5]	179000 N 40200 lbf
C0 - Static Radial Rating	335000 N 75300 lbf
C_{a90} - Dynamic Thrust Rating (90 million revolutions)[6]	28900 N 6500 lbf

Factors

K - Factor[7]	1.6
e - ISO Factor[8]	0.36
Y - ISO Factor[9]	1.65
G1 - Heat Generation Factor (Roller-Raceway)	365
G2 - Heat Generation Factor (Rib-Roller End)	168
Cg - Geometry Factor	0.175

[1] These maximum fillet radii will be cleared by the bearing corners.

[2] These maximum fillet radii will be cleared by the bearing corners.

[3] Negative value indicates effective center inside cone backface.

[4] Based on 90 x 10^6 revolutions L_{10} life, for The Timken Company life calculation method. C_{90} and C_{a90} are radial and thrust values.

[5] Based on 1 x 10^6 revolutions L_{10} life, for the ISO life calculation method.

[6] Based on 90 x 10^6 revolutions L_{10} life, for The Timken Company life calculation method. C_{90} and C_{a90} are radial and thrust values for a single-row, $C_{90(2)}$ is the two-row radial value.

[7] These factors apply for both inch and metric calculations. Consult your Timken representative for instruction on use.

[8] These factors apply for both inch and metric calculations. Consult your Timken representative for instruction

on use.

[9] These factors apply for both inch and metric calculations. Consult your Timken representative for instruction on use.

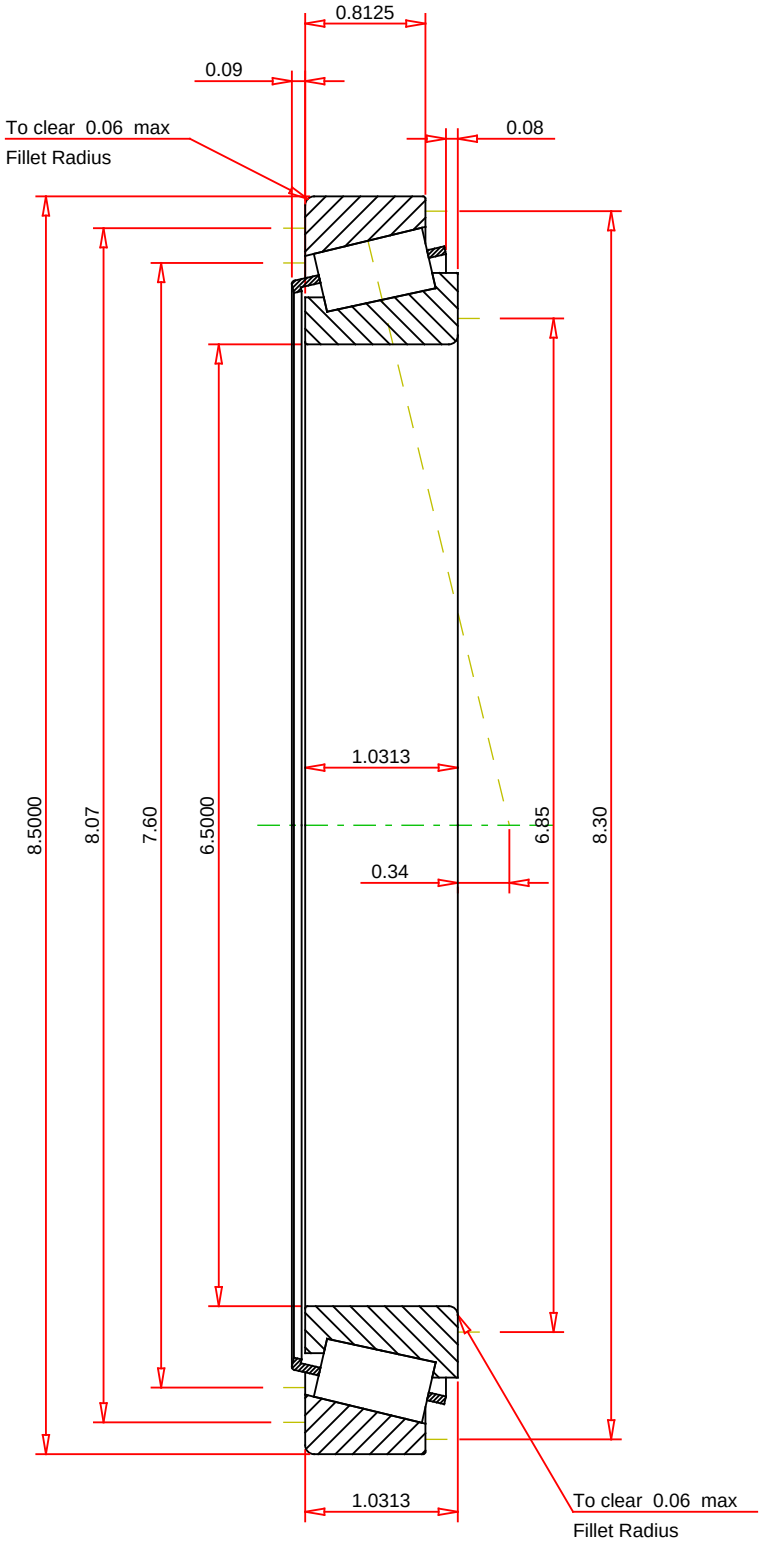

IMPERIAL UNITS

ISO Factor - e	0.36	
ISO Factor - Y	1.65	
Bearing Weight	5.2	lb
Number of Rollers Per Row	43	
Effective Center Location	0.34	inch

TIMKEN

THE TIMKEN COMPANY
NORTH CANTON, OHIO USA

L433749 - L433710
TS BEARING ASSEMBLY

K Factor	1.6	
Dynamic Radial Rating - C90	46300	lbf
Dynamic Thrust Rating - Ca90	28900	lbf
Static Radial Rating - C0	335000	lbf
Dynamic Radial Rating - C1	179000	lbf

Every reasonable effort has been made to ensure the accuracy of the information contained in this writing, but no liability is accepted for errors, omissions or for any other reason.

FOR DISCUSSION ONLY