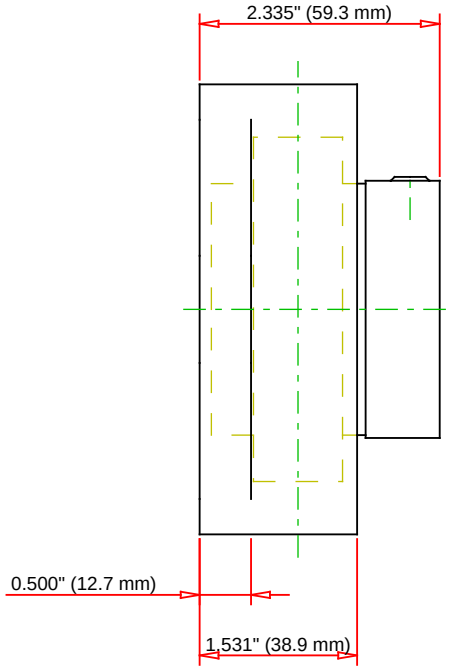

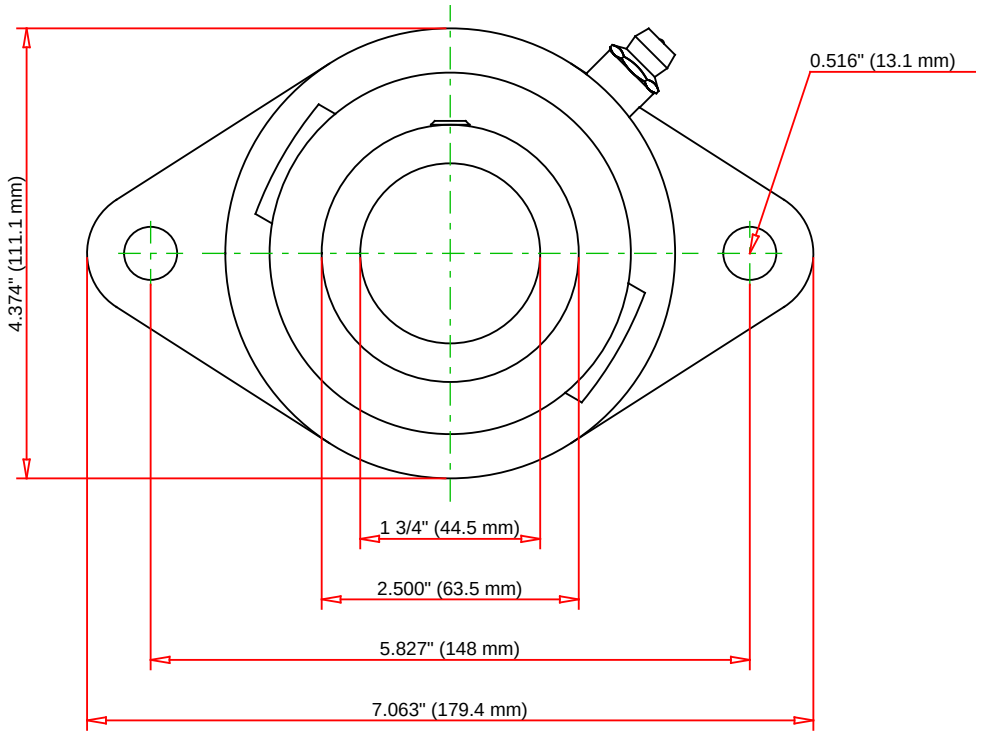

Bearing Number	G1112KPPB4				
Load Ratings - C_r	8160	lbf	36300	N	
Load Ratings - C_{0r}	4600	lbf	20500	N	
Weight	5.245	lb	2.379	kg	

TIMKEN

THE TIMKEN COMPANY
NORTH CANTON, OHIO USA

TCJT 1 3/4

Fafnir® Two-Bolt Flanged Units Eccentric Locking Collar

Every reasonable effort has been made to ensure the accuracy of the information contained in this writing, but no liability is accepted for errors, omissions or for any other reason.

FOR DISCUSSION ONLY