The Timken Company
4500 Mt Pleasant St. NW
N. Canton, OH 44720
Phone: (234) 262-3000
E-Mail: CustomerCAD@timken.com • **Web site:** www.timken.com

Part Number TCJT 1 3/4, Fafnir® Two-Bolt Flanged Units Eccentric Locking Collar



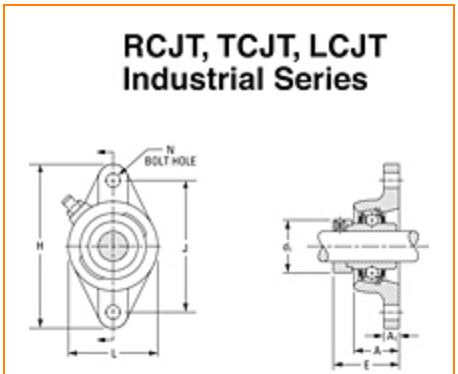

Specifications | Dimensions | Basic Load Ratings

Specifications

Shaft Size d	44.5 mm
Bearing Type	Ball Bearing
Bearing Number	G1112KPPB4
Dimension E	59.3 mm
Inside Ring Outside Diameter	63 mm
e	2.334 mm
Series	Industrial
Weight	2.379 Kg
Seal Type	Tri-Ply Seal
Housing Construction	Two-Bolt Flange
Alternate Part Name	TCJT1 3/4

Dimensions

Housing Width A	38.9 mm
Total Length H	179.4 mm
Total Height L	111.1 mm
Bolt Hole Spacing J	148.00 mm
Bolt Hole Size N	13.1 mm
Flange Thickness A1	12.70 mm
Center of Bearing from Housing End A2	0.96 mm
Inside Ring Width B	0 mm

Basic Load Ratings

Static Load Rating	20500 N
Dynamic Load Rating	36300 N

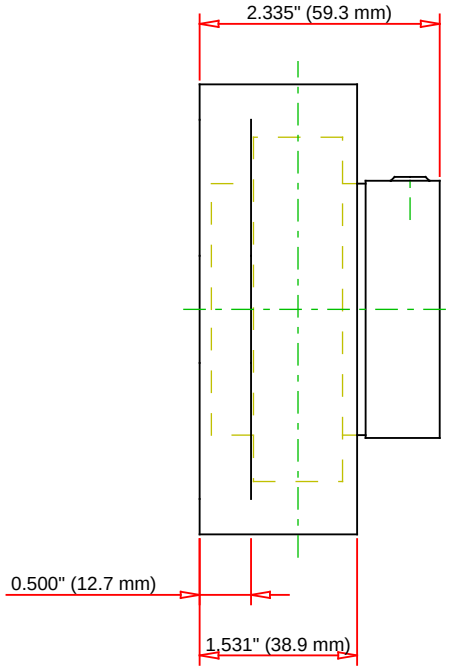

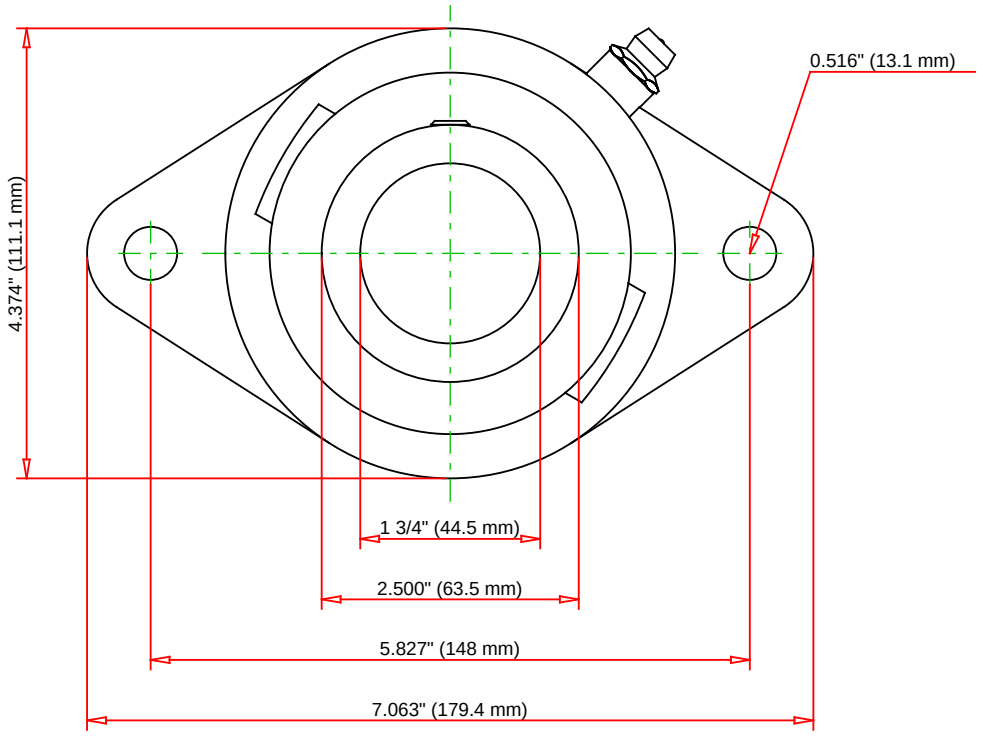

Bearing Number	G1112KPPB4				
Load Ratings - C_r	8160	lbf	36300	N	
Load Ratings - C_{0r}	4600	lbf	20500	N	
Weight	5.245	lb	2.379	kg	

TIMKEN

THE TIMKEN COMPANY
NORTH CANTON, OHIO USA

TCJT 1 3/4

Fafnir® Two-Bolt Flanged Units Eccentric Locking Collar

Every reasonable effort has been made to ensure the accuracy of the information contained in this writing, but no liability is accepted for errors, omissions or for any other reason.

FOR DISCUSSION ONLY