The Timken Company
4500 Mt Pleasant St. NW
N. Canton, OH 44720
Phone: (234) 262-3000
E-Mail: CustomerCAD@timken.com • **Web site:** www.timken.com

Timken Part Number H917840 - H917810, Tapered Roller Bearings - TS (Tapered Single) Imperial

This is the most basic and most widely used type of tapered roller bearing. It consists of two main separable parts: the cone (inner ring) assembly and the cup (outer ring). It is typically mounted in opposing pairs on a shaft.



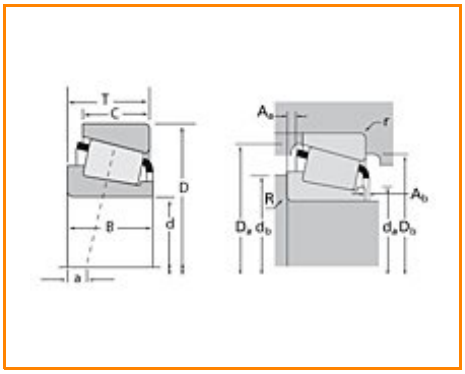

Specifications | Dimensions | Abutment and Fillet Dimensions | Basic Load Ratings | Factors

Specifications

Series	H917800
Cone Part Number	H917840
Cup Part Number	H917810
Design Units	Imperial
Bearing Weight	6.600 Kg 14.400 lb
Cage Type	Stamped Steel

Dimensions

d - Bore	76.2 mm 3 in
D - Cup Outer Diameter	180.975 mm 7.1250 in
B - Cone Width	53.183 mm 2.0938 in
C - Cup Width	35.720 mm 1.4063 in
T - Bearing Width	53.975 mm 2.1250 in

Abutment and Fillet Dimensions

R - Cone Backface "To Clear" Radius[1]	3.560 mm 0.14 in
r - Cup Backface "To Clear" Radius[2]	3.30 mm 0.130 in
da - Cone Frontface Backing Diameter	100.08 mm 4.63 in
db - Cone Backface Backing Diameter	109.98 mm 4.33 in
Da - Cup Frontface Backing Diameter	170.90 mm 6.73 in
Db - Cup Backface Backing Diameter	151.89 mm 5.98 in
Ab - Cage-Cone Frontface Clearance	3.8 mm 0.15 in
Aa - Cage-Cone Backface Clearance	8.6 mm 0.34 in
a - Effective Center Location[3]	0.50 mm 0.02 in

Basic Load Ratings

C90 - Dynamic Radial Rating (90 million revolutions)[4]	116000 N 26100 lbf
C1 - Dynamic Radial Rating (1 million revolutions)[5]	448000 N 101000 lbf
C0 - Static Radial Rating	458000 N 103000 lbf
C_{a90} - Dynamic Thrust Rating (90 million revolutions)[6]	146000 N 32700 lbf

Factors

K - Factor[7]	0.8
e - ISO Factor[8]	0.73
Y - ISO Factor[9]	0.82
G1 - Heat Generation Factor (Roller-Raceway)	147
G2 - Heat Generation Factor (Rib-Roller End)	20.7
Cg - Geometry Factor	0.112

[1] These maximum fillet radii will be cleared by the bearing corners.

[2] These maximum fillet radii will be cleared by the bearing corners.

[3] Negative value indicates effective center inside cone backface.

[4] Based on 90 x 10^6 revolutions L_{10} life, for The Timken Company life calculation method. C_{90} and C_{a90} are radial and thrust values.

[5] Based on 1 x 10^6 revolutions L_{10} life, for the ISO life calculation method.

[6] Based on 90 x 10^6 revolutions L_{10} life, for The Timken Company life calculation method. C_{90} and C_{a90} are radial and thrust values for a single-row, $C_{90(2)}$ is the two-row radial value.

[7] These factors apply for both inch and metric calculations. Consult your Timken representative for instruction on use.

[8] These factors apply for both inch and metric calculations. Consult your Timken representative for instruction

on use.

[9] These factors apply for both inch and metric calculations. Consult your Timken representative for instruction on use.

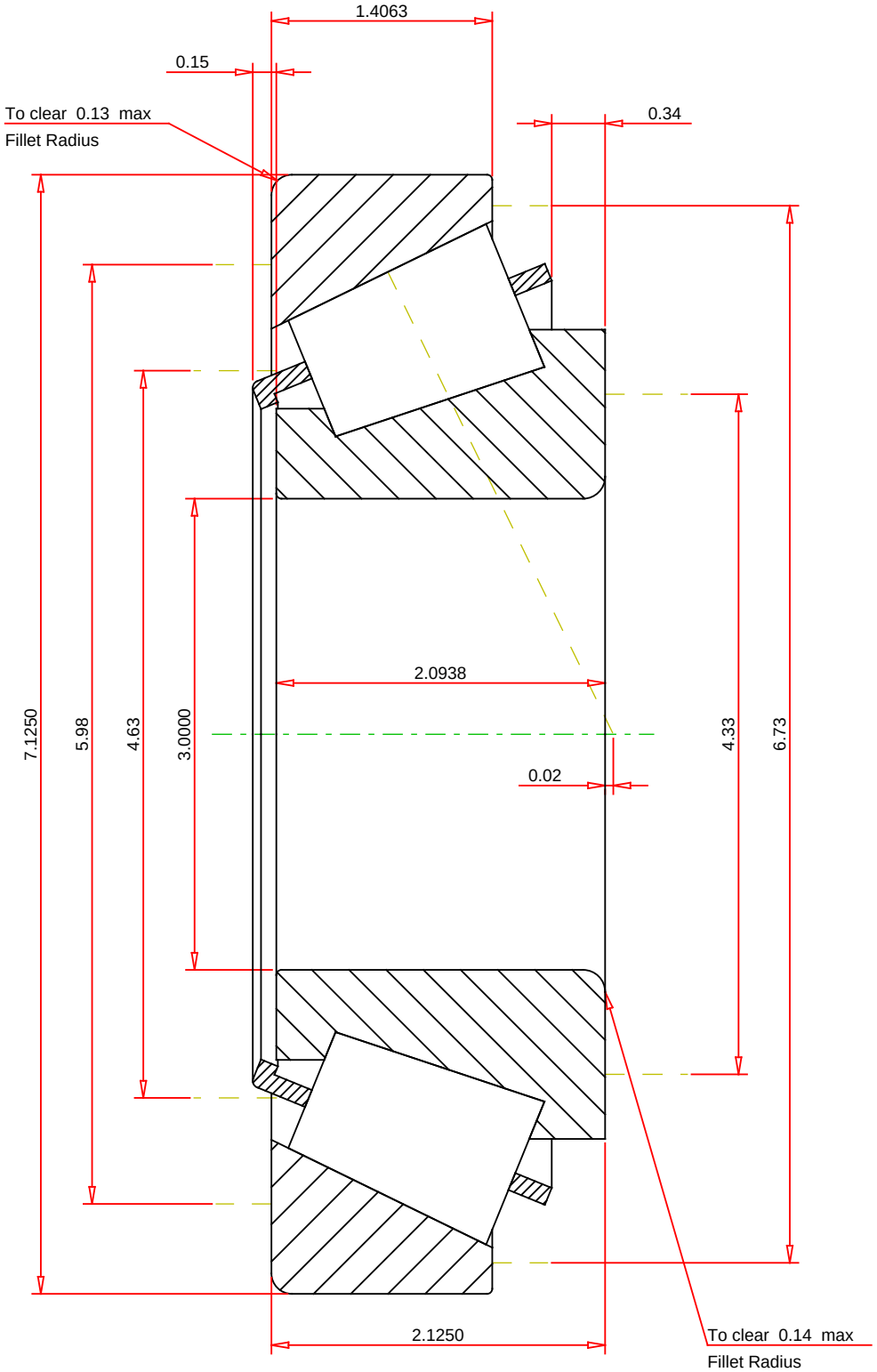

IMPERIAL UNITS

ISO Factor - e	0.73	
ISO Factor - Y	0.82	
Bearing Weight	14.4	lb
Number of Rollers Per Row	16	
Effective Center Location	0.02	inch

TIMKEN

THE TIMKEN COMPANY
NORTH CANTON, OHIO USA

H917840 - H917810
TS BEARING ASSEMBLY

K Factor	0.8	
Dynamic Radial Rating - C90	116000	lbf
Dynamic Thrust Rating - Ca90	146000	lbf
Static Radial Rating - C0	458000	lbf
Dynamic Radial Rating - C1	448000	lbf

Every reasonable effort has been made to ensure the accuracy of the information contained in this writing, but no liability is accepted for errors, omissions or for any other reason.

FOR DISCUSSION ONLY