The Timken Company
4500 Mt Pleasant St. NW
N. Canton, OH 44720
Phone: (234) 262-3000
E-Mail: CustomerCAD@timken.com • **Web site:** www.timken.com

Timken Part Number YCJ 1 1/4 SGT, Four-Bolt Flanged Units Setscrew Locking (Includes Industrial and Standard Series)



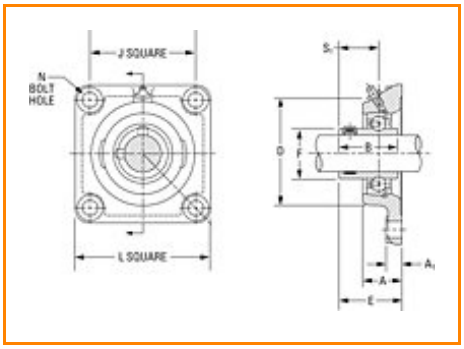

Specifications | Dimensions | Basic Load Ratings

Specifications

Bore Size d	1 1/4 in 31.8 mm
Bearing Number	GY1104KRRB SGT
Dimension D	3.500 in 88.9 mm
Dimension E	1.927 in 48.95 mm
Inside Ring Outside Diameter	1.843 in 46.81 mm
Series	Industrial
Weight	3.94 lb 1.79 Kg

Seal Type	Shroud Seal

Dimensions

Total Length L	117.5 mm 4.626 in
Total Width A	1.252 in 31.8 mm
Bolt Hole Size N	12 mm 0.472 in
Flange Thickness A1	13.5 mm 0.531 in
Center of Bearing from Housing End A2	20.75 mm 0.817 in
Inside Ring Width B	N/A
Total Height	117.5 mm 4.626 in
Bolt Size	M12
Center of Bearing from Bearing End S	17 mm 0.669 in

Basic Load Ratings

Static Load Rating	3400 lbf 15100 N
Dynamic Load Rating	6400 lbf 28500 N

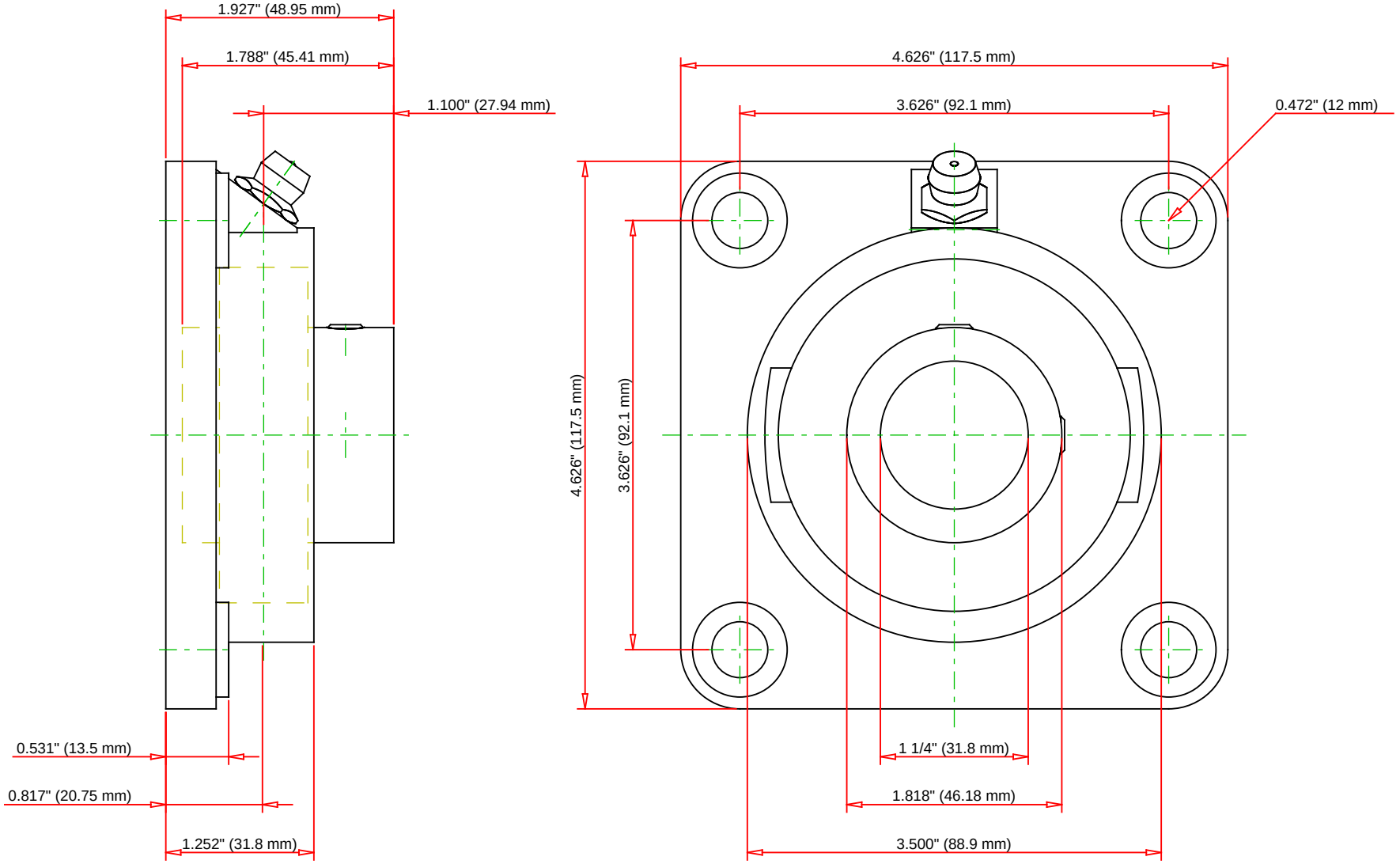

Bearing Number	GY1104KRRB SGT			
Load Ratings - C_r	6400	lbf	28500	N
Load Ratings - C_{0r}	3400	lbf	15100	N
Weight	0	lb	0	kg
Bolt Size	M8x1.25			

TIMKEN

THE TIMKEN COMPANY
NORTH CANTON, OHIO USA

YCJ 1 1/4 SGT

Four-Bolt Flanged Units Setscrew Locking
(Includes Industrial and Standard Series)

Every reasonable effort has been made to ensure the accuracy of the information contained in this writing, but no liability is accepted for errors, omissions or for any other reason.

FOR DISCUSSION ONLY