The Timken Company
4500 Mt Pleasant St. NW
N. Canton, OH 44720
Phone: (234) 262-3000
E-Mail: CustomerCAD@timken.com • **Web site:** www.timken.com

Timken Part Number HH221449 - HH221410, Tapered Roller Bearings - TS (Tapered Single) Imperial

This is the most basic and most widely used type of tapered roller bearing. It consists of two main separable parts: the cone (inner ring) assembly and the cup (outer ring). It is typically mounted in opposing pairs on a shaft.



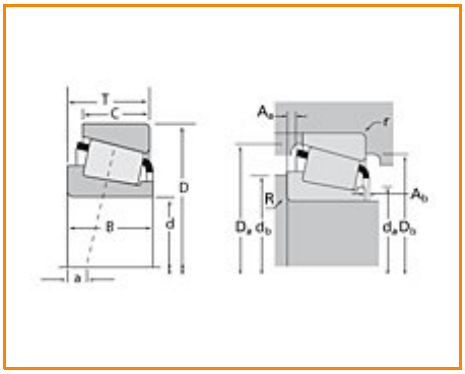

Specifications | Dimensions | Abutment and Fillet Dimensions | Basic Load Ratings | Factors

Specifications

Series	HH221400
Cone Part Number	HH221449
Cup Part Number	HH221410
Design Units	Imperial
Bearing Weight	6.90 Kg 15.200 lb
Cage Type	Stamped Steel

Dimensions

d - Bore	101.600 mm 4.0000 in
D - Cup Outer Diameter	190.5 mm 7.5 in
B - Cone Width	57.531 mm 2.2650 in
C - Cup Width	46.038 mm 1.8125 in
T - Bearing Width	57.150 mm 2.2500 in

Abutment and Fillet Dimensions

R - Cone Backface "To Clear" Radius[1]	7.870 mm 0.310 in
r - Cup Backface "To Clear" Radius[2]	3.30 mm 0.130 in
da - Cone Frontface Backing Diameter	115.82 mm 5.39 in
db - Cone Backface Backing Diameter	131.06 mm 5.16 in
Da - Cup Frontface Backing Diameter	179.10 mm 7.06 in
Db - Cup Backface Backing Diameter	170.94 mm 6.73 in
Ab - Cage-Cone Frontface Clearance	4.1 mm 0.16 in
Aa - Cage-Cone Backface Clearance	2 mm 0.08 in
a - Effective Center Location[3]	-15 mm -0.59 in

Basic Load Ratings

C90 - Dynamic Radial Rating (90 million revolutions)[4]	138000 N 31100 lbf
C1 - Dynamic Radial Rating (1 million revolutions)[5]	534000 N 120000 lbf
C0 - Static Radial Rating	692000 N 156000 lbf
C_{a90} - Dynamic Thrust Rating (90 million revolutions)[6]	79300 N 17800 lbf

Factors

K - Factor[7]	1.74
e - ISO Factor[8]	0.33
Y - ISO Factor[9]	1.79
G1 - Heat Generation Factor (Roller-Raceway)	266
G2 - Heat Generation Factor (Rib-Roller End)	28.4
Cg - Geometry Factor	0.107

[1] These maximum fillet radii will be cleared by the bearing corners.

[2] These maximum fillet radii will be cleared by the bearing corners.

[3] Negative value indicates effective center inside cone backface.

[4] Based on 90 x 10^6 revolutions L_{10} life, for The Timken Company life calculation method. C_{90} and C_{a90} are radial and thrust values.

[5] Based on 1 x 10^6 revolutions L_{10} life, for the ISO life calculation method.

[6] Based on 90 x 10^6 revolutions L_{10} life, for The Timken Company life calculation method. C_{90} and C_{a90} are radial and thrust values for a single-row, $C_{90(2)}$ is the two-row radial value.

[7] These factors apply for both inch and metric calculations. Consult your Timken representative for instruction on use.

[8] These factors apply for both inch and metric calculations. Consult your Timken representative for instruction

on use.

[9] These factors apply for both inch and metric calculations. Consult your Timken representative for instruction on use.

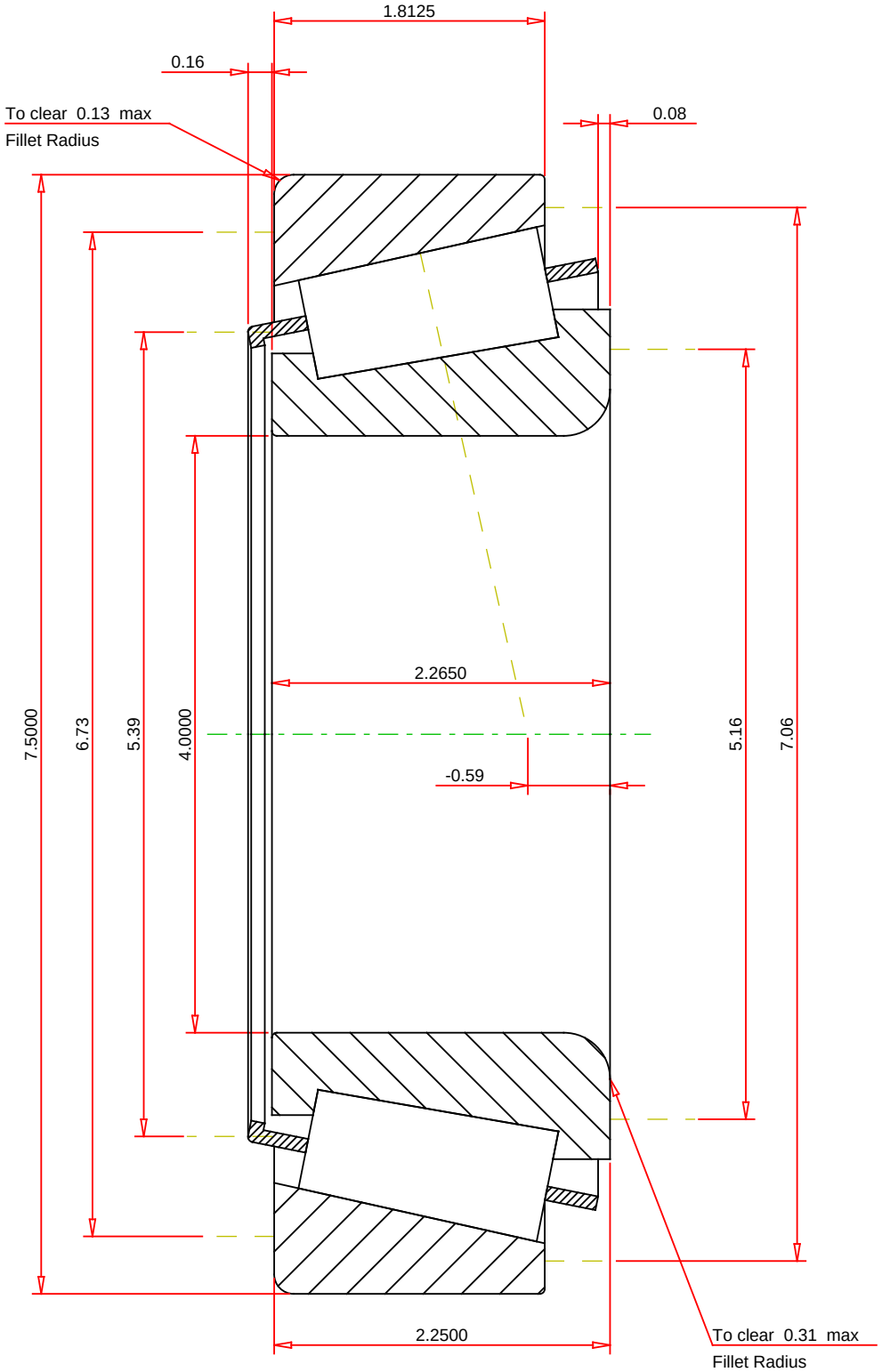

IMPERIAL UNITS

ISO Factor - e	0.33	
ISO Factor - Y	1.79	
Bearing Weight	15.2	lb
Number of Rollers Per Row	17	
Effective Center Location	-0.59	inch

TIMKEN

THE TIMKEN COMPANY
NORTH CANTON, OHIO USA

HH221449 - HH221410
TS BEARING ASSEMBLY

K Factor	1.74	
Dynamic Radial Rating - C90	138000	lbf
Dynamic Thrust Rating - Ca90	79300	lbf
Static Radial Rating - C0	692000	lbf
Dynamic Radial Rating - C1	534000	lbf

Every reasonable effort has been made to ensure the accuracy of the information contained in this writing, but no liability is accepted for errors, omissions or for any other reason.

FOR DISCUSSION ONLY