The Timken Company
4500 Mt Pleasant St. NW
N. Canton, OH 44720
Phone: (234) 262-3000
E-Mail: CustomerCAD@timken.com • **Web site:** www.timken.com

Timken Part Number YCJT 1 11/16 SGT, Two-Bolt Flanged Units Setscrew Locking (Includes Industrial and Standard Series)



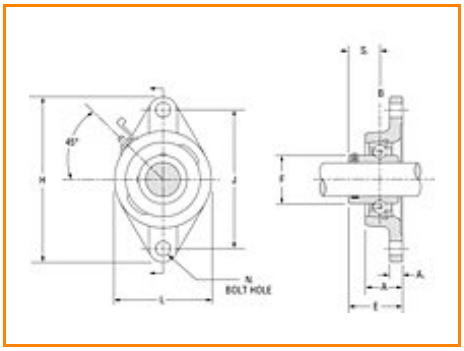

Specifications | Dimensions | Basic Load Ratings

Specifications

Bore Size d	1 11/16 in 42.9 mm
Bearing Number	GY1111KRRB SGT
Dimension E	2.186 in 55.52 mm
Inside Ring Outside Diameter	2.280 in 57.9 mm
Series	Industrial
Weight	5.24 lb 2.38 Kg
Seal Type	Shroud Seal

Dimensions

Total Length H	179.4 mm 7.063 in
Total Height L	111.1 mm 4.374 in
Total Width A	1.531 in 38.9 mm
Bolt Hole Spacing J	148.4 mm 5.843 in
Bolt Hole Size N	13 mm 0.512 in
Flange Thickness A1	14.3 mm 0.563 in
Center of Bearing from Housing End A2	24.12 mm 0.950 in
Inside Ring Width B	50.4 mm 1.984 in
Center of Bearing from Bearing End S	24.12 mm 0.950 in

Basic Load Ratings

Static Load Rating	4500 lbf 20000 N
Dynamic Load Rating	8150 lbf 36000 N

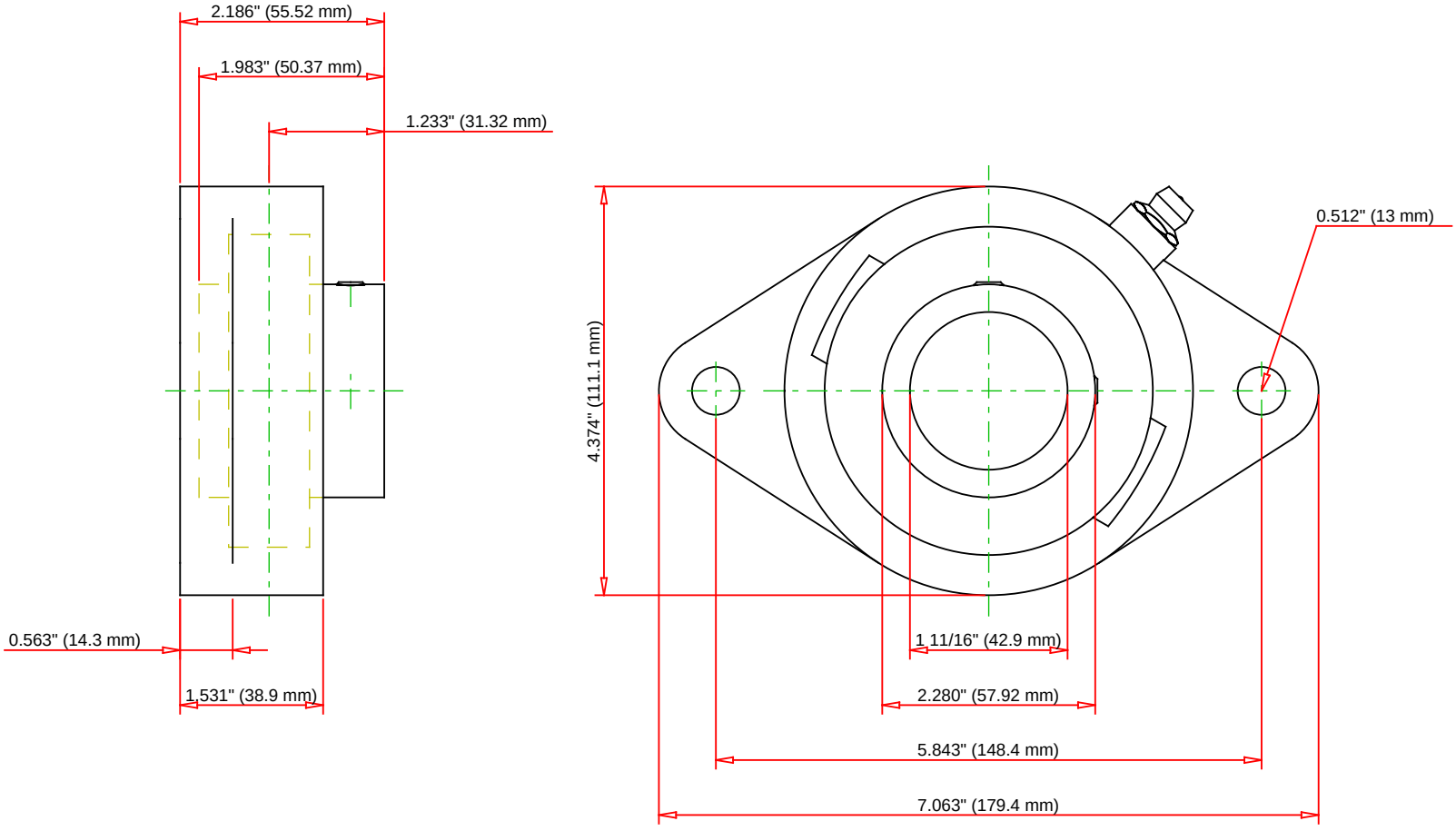

Bearing Number	GY1111KRRB SGT			
Load Ratings - C_r	8150	lbf	36000	N
Load Ratings - C_{0r}	4500	lbf	20000	N
Weight		lb		kg
Bolt Size	M8x1.25			

TIMKEN

THE TIMKEN COMPANY
NORTH CANTON, OHIO USA

YCJT 1 11/16 SGT

Two-Bolt Flanged Units Setscrew Locking
(Includes Industrial and Standard Series)

Every reasonable effort has been made to ensure the accuracy of the information contained in this writing, but no liability is accepted for errors, omissions or for any other reason.

FOR DISCUSSION ONLY