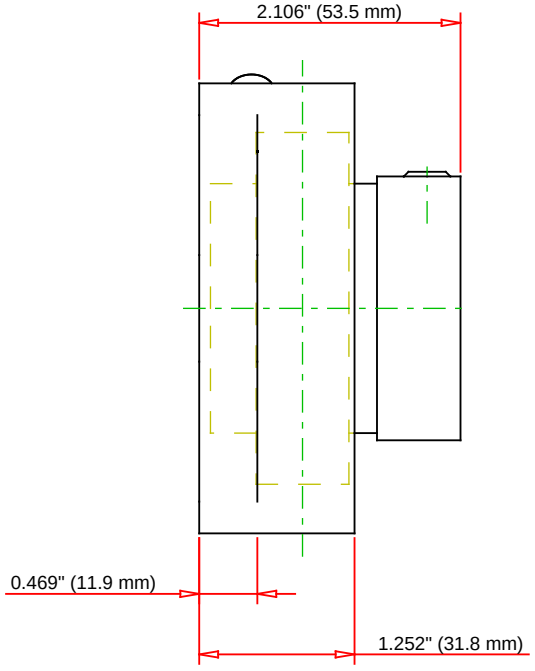

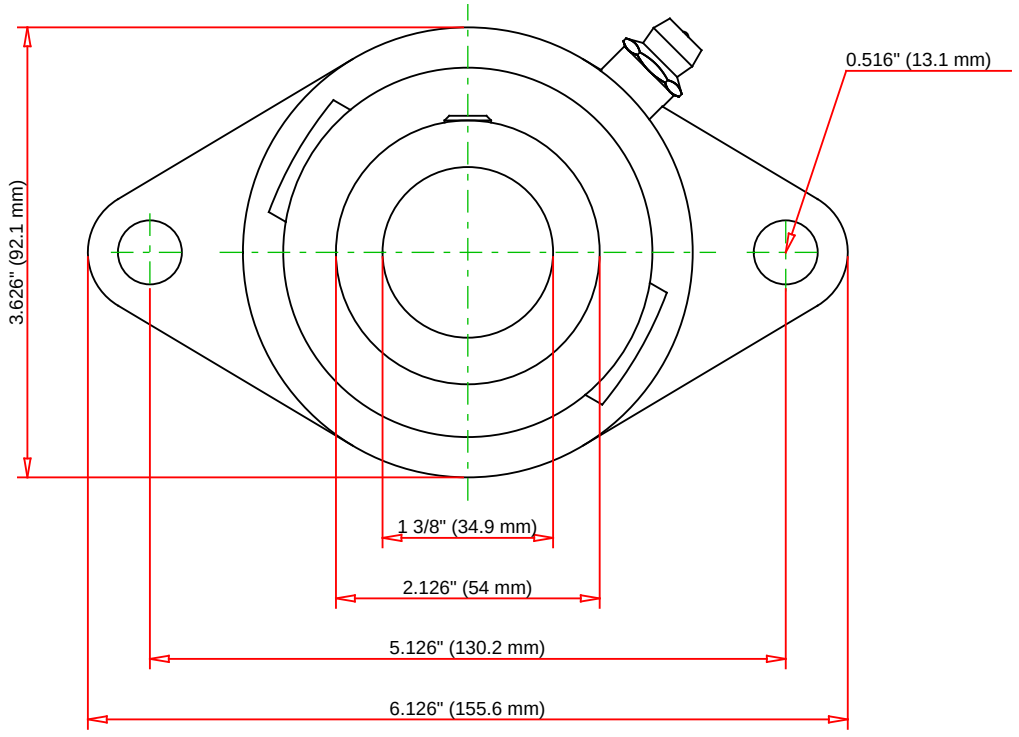

Bearing Number	G1106KPPB2			
Load Ratings - C_r	6400	lbf	28500	N
Load Ratings - C_{0r}	3440	lbf	15300	N
Weight	3.183	lb	1.444	kg

TIMKEN

THE TIMKEN COMPANY
NORTH CANTON, OHIO USA

TCJT 1 3/8

Fafnir® Two-Bolt Flanged Units Eccentric Locking Collar

Every reasonable effort has been made to ensure the accuracy of the information contained in this writing, but no liability is accepted for errors, omissions or for any other reason.

FOR DISCUSSION ONLY