The Timken Company
4500 Mt Pleasant St. NW
N. Canton, OH 44720
Phone: (234) 262-3000
E-Mail: CustomerCAD@timken.com • **Web site:** www.timken.com

Timken Part Number JP8049 - JP8010, Tapered Roller Bearings - TS (Tapered Single) Metric

This is the most basic and most widely used type of tapered roller bearing. It consists of two main separable parts: the cone (inner ring) assembly and the cup (outer ring). It is typically mounted in opposing pairs on a shaft.



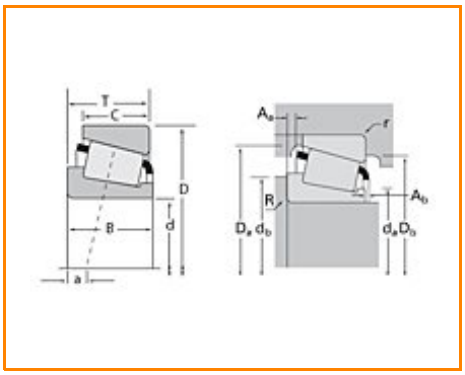

Specifications | Dimensions | Abutment and Fillet Dimensions | Basic Load Ratings | Factors

Specifications

Series	JP8000
Cone Part Number	JP8049
Cup Part Number	JP8010
Design Units	METRIC
Bearing Weight	1.000 Kg 2.10 lb
Cage Type	Stamped Steel

Dimensions

d - Bore	80 mm 3.1496 in

D - Cup Outer Diameter	125 mm 4.9213 in
B - Cone Width	22.500 mm 0.8858 in
C - Cup Width	17.500 mm 0.6890 in
T - Bearing Width	24.000 mm 0.9449 in

Abutment and Fillet Dimensions

R - Cone Backface "To Clear" Radius[1]	2.030 mm 0.080 in
r - Cup Backface "To Clear" Radius[2]	2.03 mm 0.08 in
da - Cone Frontface Backing Diameter	86.11 mm 3.39 in
db - Cone Backface Backing Diameter	88.90 mm 3.50 in
Da - Cup Frontface Backing Diameter	119.90 mm 4.75 in
Db - Cup Backface Backing Diameter	115.06 mm 4.53 in
Ab - Cage-Cone Frontface Clearance	3.8 mm 0.15 in
Aa - Cage-Cone Backface Clearance	1.5 mm 0.06 in
a - Effective Center Location[3]	2.3 mm 0.09 in

Basic Load Ratings

C90 - Dynamic Radial Rating (90 million revolutions)[4]	29300 N 6600 lbf
C1 - Dynamic Radial Rating (1 million revolutions)[5]	113000 N 25400 lbf
C0 - Static Radial Rating	141000 N 31800 lbf
C_{a90} - Dynamic Thrust Rating (90 million revolutions)[6]	22700 N 5100 lbf

Factors

K - Factor[7]	1.29
e - ISO Factor[8]	0.45
Y - ISO Factor[9]	1.33
G1 - Heat Generation Factor (Roller-Raceway)	69.7
G2 - Heat Generation Factor (Rib-Roller End)	37.4
Cg - Geometry Factor	0.109

[1] These maximum fillet radii will be cleared by the bearing corners.
[2] These maximum fillet radii will be cleared by the bearing corners.
[3] Negative value indicates effective center inside cone backface.
[4] Based on 90 x 10^6 revolutions L_{10} life, for The Timken Company life calculation method. C_{90} and C_{a90} are radial and thrust values.
[5] Based on 1 x 10^6 revolutions L_{10} life, for the ISO life calculation method.
[6] Based on 90 x 10^6 revolutions L_{10} life, for The Timken Company life calculation method. C_{90} and C_{a90} are radial and thrust values for a single-row, $C_{90(2)}$ is the two-row radial value.
[7] These factors apply for both inch and metric calculations. Consult your Timken representative for instruction on use.
[8] These factors apply for both inch and metric calculations. Consult your Timken representative for instruction on use.
[9] These factors apply for both inch and metric calculations. Consult your Timken representative for instruction on use.

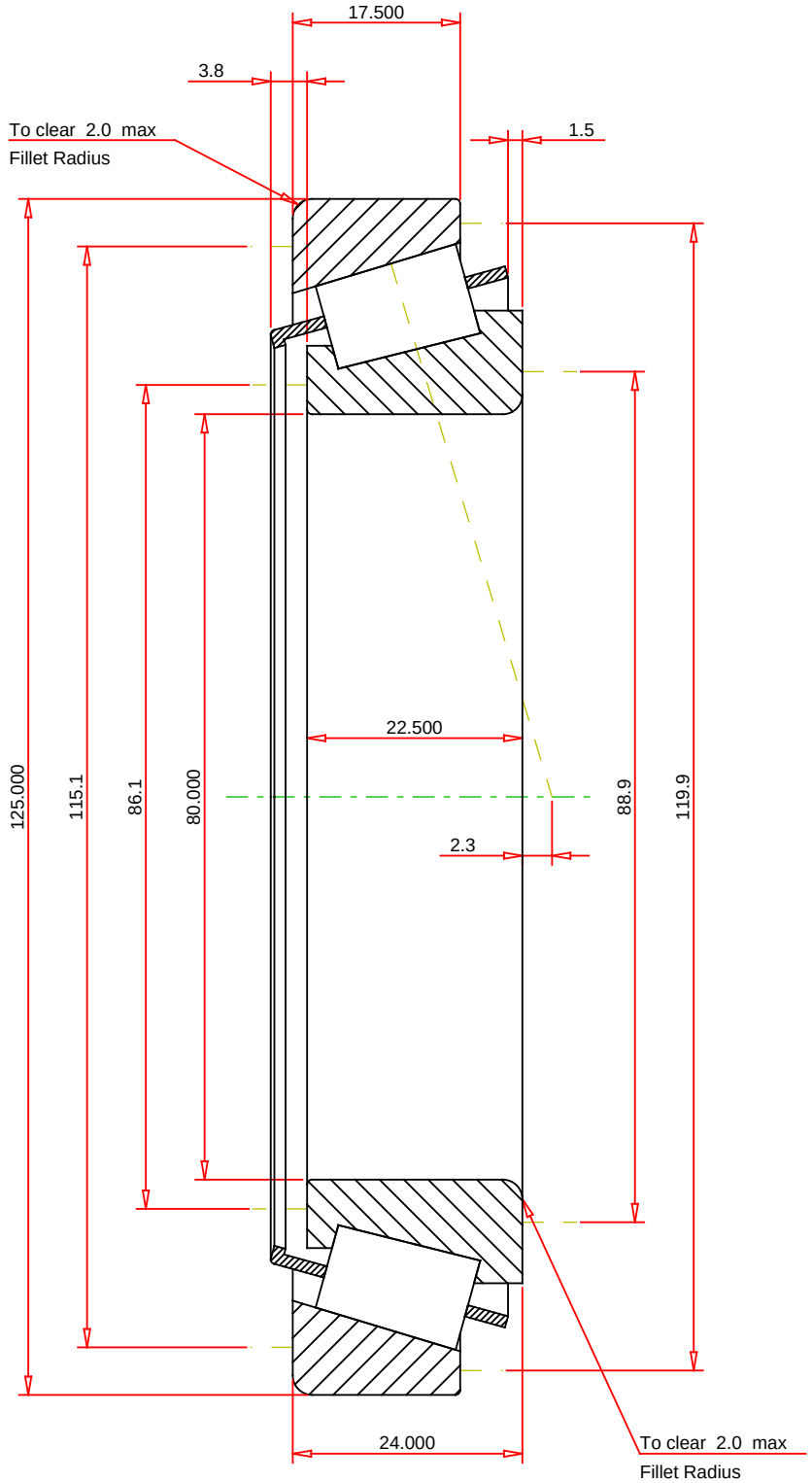

METRIC UNITS

ISO Factor - e	0.45	
ISO Factor - Y	1.33	
Bearing Weight	1	kg
Number of Rollers Per Row	21	
Effective Center Location	2.3	mm

TIMKEN®

THE TIMKEN COMPANY
NORTH CANTON, OHIO USA

JP8049 - JP8010
TS BEARING ASSEMBLY

K Factor	1.29	
Dynamic Radial Rating - C90	29300	N
Dynamic Thrust Rating - Ca90	22700	N
Static Radial Rating - C0	141000	N
Dynamic Radial Rating - C1	113000	N

Every reasonable effort has been made to ensure the accuracy of the information contained in this writing, but no liability is accepted for errors, omissions or for any other reason.

FOR DISCUSSION ONLY