The Timken Company
4500 Mt Pleasant St. NW
N. Canton, OH 44720
Phone: (234) 262-3000
E-Mail: CustomerCAD@timken.com • **Web site:** www.timken.com

Timken Part Number GN207KLLB, Fafnir® Eccentric Locking Collar Ball Bearings



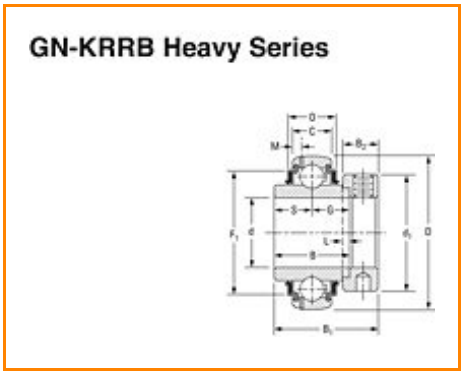

Specifications | Dimensions | Basic Load Ratings

Specifications

Bore Size d	2 7/16 in 61.9 mm
Bore Type	Cylindrical bore
Bearing Type	Ball Bearing
Seal Type	Labyrinth Seal
Material	Bearing Steel
Lubrication Type	Relubricatable
O.D. Type	Spherical OD
Dimension M	0.230 in 5.84 mm
Dimension B1	3.126 in 79.4 mm

Dimension B2	0.937 in 23.8 mm
Series	Medium-Duty
Weight	0.500 lb 0.200 Kg
Sub Series	GN..KLLB

Dimensions

Outside Diameter D	5.118 in 130.000 mm
Inside Ring Width B	61.91 mm 2.437 in
Outside Ring Width C	33.000 mm 1.299 in
Radius r	0.6 mm 0.024 in
Center of Bearing from End S	31 mm 1.220 in
Dimension S1	48.4 mm 1.906 in
Set Screw Size	7/16-14
Number of Set Screws	2
Angle between Set Screws	90 º

Basic Load Ratings

Static Load Rating	10800 lbf 48000 N

Dynamic Load Rating	20400 lbf 90000 N

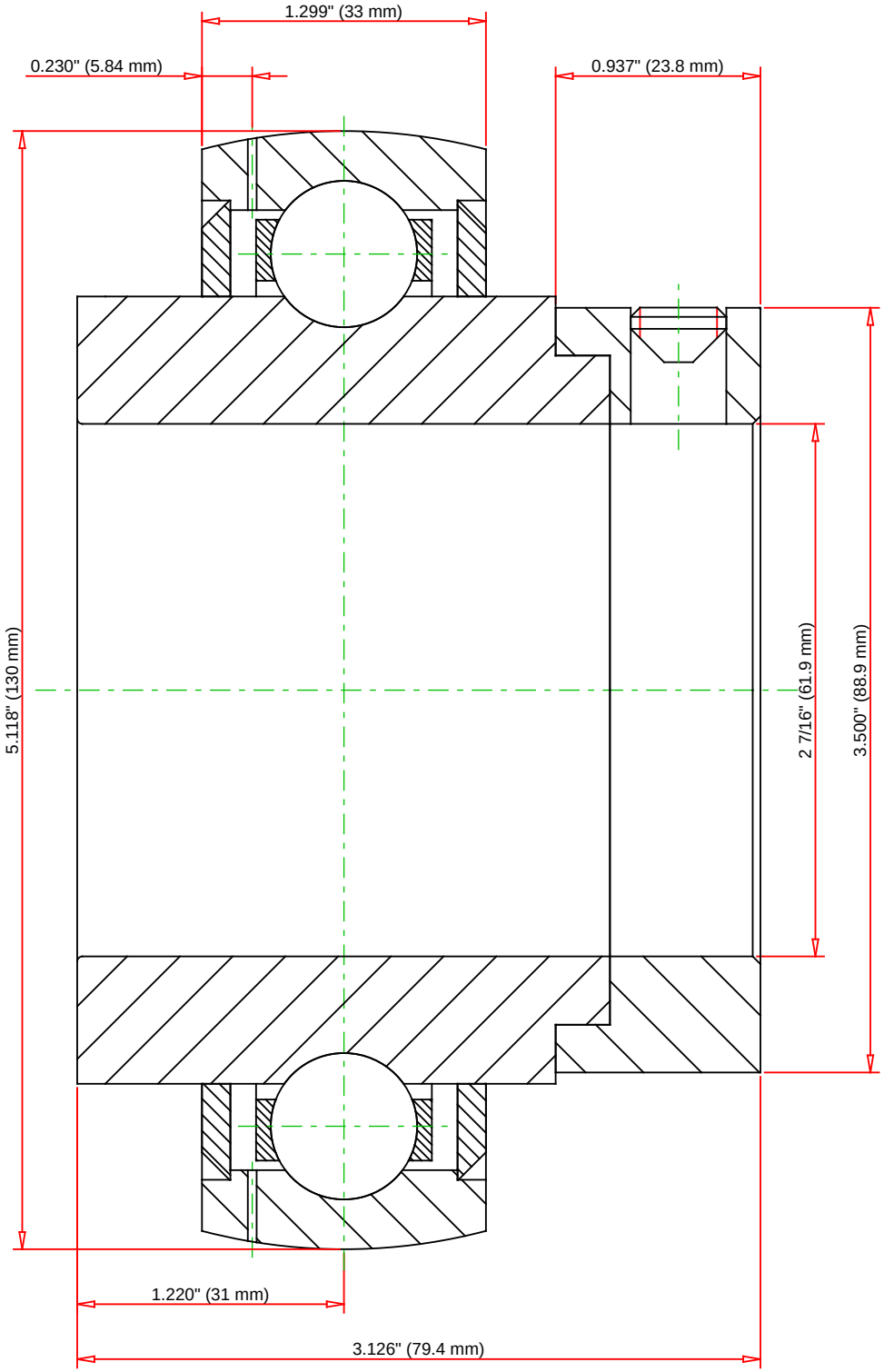

Weight	0.5 lb	0.2 kg

TIMKEN®

THE TIMKEN COMPANY
NORTH CANTON, OHIO USA

GN207KLLB

Fafnir® Eccentric Locking Collar Ball Bearings

Basic Load Ratings - C_r	20400 lbf	90000 N
Load Ratings - C_{0r}	10800 lbf	48000 N

Every reasonable effort has been made to ensure the accuracy of the information contained in this writing, but no liability is accepted for errors, omissions or for any other reason.

FOR DISCUSSION ONLY