The Timken Company
4500 Mt Pleasant St. NW
N. Canton, OH 44720
Phone: (234) 262-3000
E-Mail: CustomerCAD@timken.com • **Web site:** www.timken.com

Timken Part Number VCJT 1 15/16, Two-Bolt Flanged Units Eccentric Locking Collar (Includes Industrial and Standard Series)



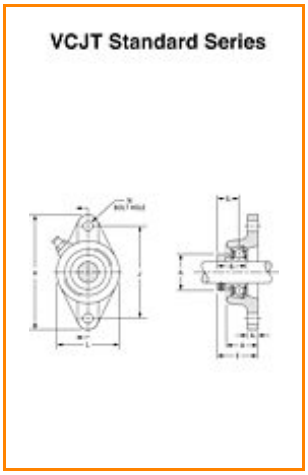

Specifications | Dimensions | Basic Load Ratings

Specifications

Bore Size d	1 15/16 in 49.2 mm
Bearing Number	GRA115RRB
Dimension E	2.402 in 61 mm
Inside Ring Outside Diameter	2.728 in 69.3 mm
Series	Standard
Weight	5.494 lb 2.492 Kg
Seal Type	Molded Shroud

Dimensions

Total Width A	42.9 mm 1.689 in
Total Length H	188.9 mm 7.437 in
Total Height L	115.8 mm 4.559 in
Bolt Hole Spacing J	157.2 mm 6.189 in
Bolt Hole Size N	17.1 mm 0.673 in
Flange Thickness A1	12.7 mm 0.500 in
Center of Bearing from Housing End A2	28.5 mm 1.122 in
Inside Ring Width B	43.7 mm 1.720 in
Center of Bearing from Bearing End S	28.5 mm 1.122 in

Basic Load Ratings

Static Load Rating	8800 lbf 39200 N
Dynamic Load Rating	5100 lbf 22700 N

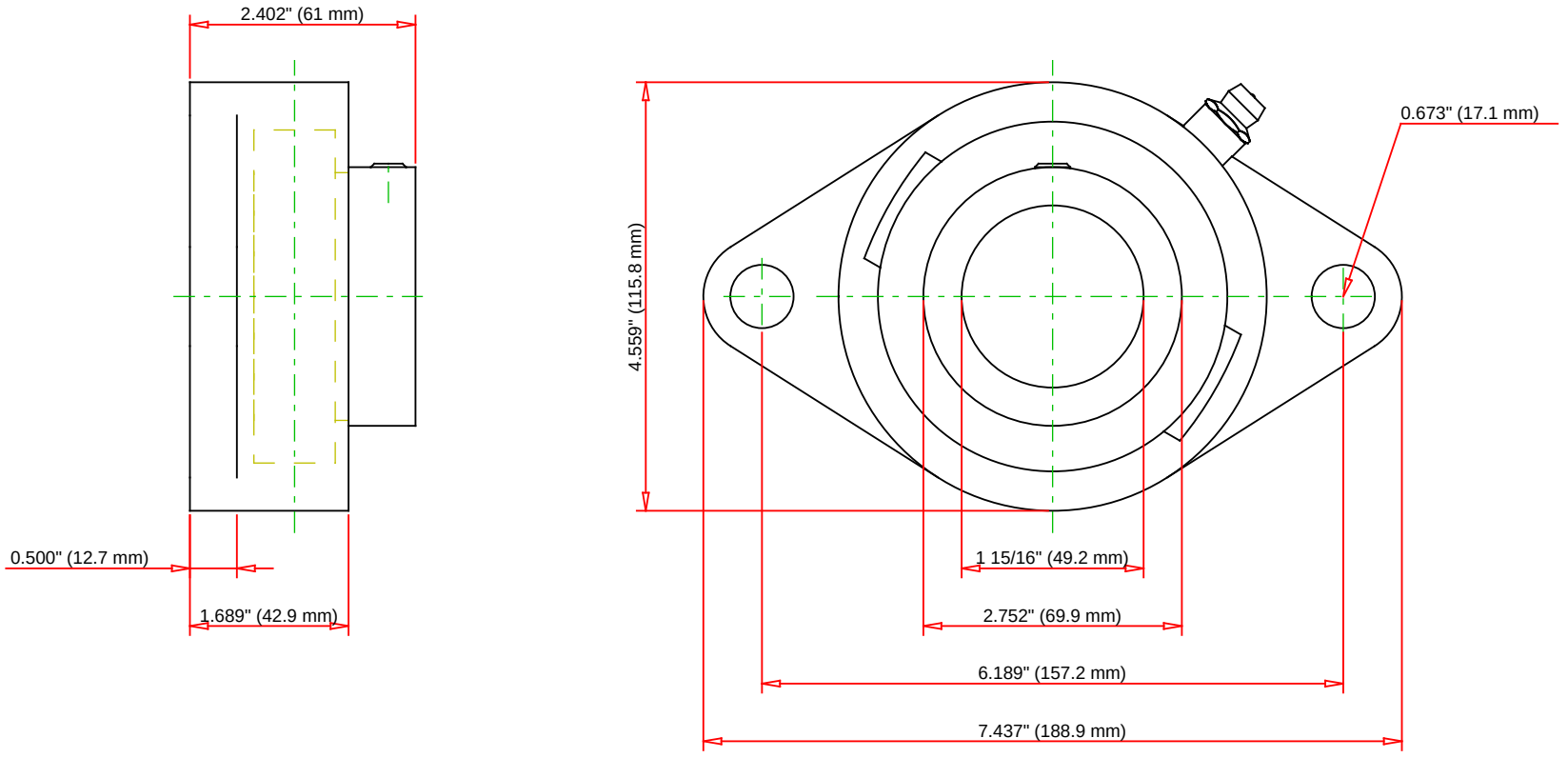

Bearing Number	GRA115RRB			
Load Ratings - C_r	8800	lbf	39200	N
Load Ratings - C_{0r}	5100	lbf	22700	N
Weight	5.494	lb	2.492	kg

TIMKEN

THE TIMKEN COMPANY
NORTH CANTON, OHIO USA

VCJT 1 15/16

Two-Bolt Flanged Units Eccentric Locking Collar
(Includes Industrial and Standard Series)

Every reasonable effort has been made to ensure the accuracy of the information contained in this writing, but no liability is accepted for errors, omissions or for any other reason.

FOR DISCUSSION ONLY