The Timken Company
4500 Mt Pleasant St. NW
N. Canton, OH 44720
Phone: (234) 262-3000
E-Mail: CustomerCAD@timken.com • **Web site:** www.timken.com

Timken Part Number VAS 1 3/4, Pillow Block Units Eccentric Locking Collar (Includes Industrial and Standard Series)



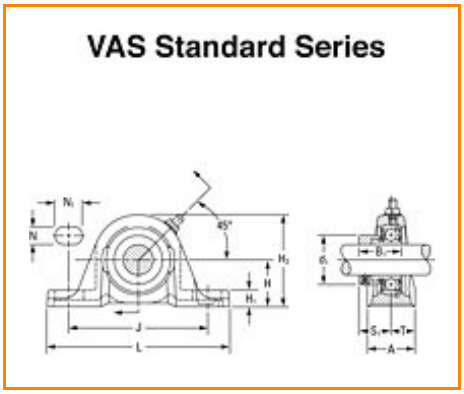

Specifications | Dimensions | Basic Load Ratings

Specifications

Bore Size d	1 3/4 in 44.5 mm
Bearing Number	GRA112RRB
Inside Ring Outside Diameter	0.720 in 18.3 mm
Dimension B1	1.720 in 43.7 mm
Dimension T	1.000 in 25.4 mm
Series	Standard
Weight	4.985 lb 2.261 Kg
Seal Type	Molded Shroud

Dimensions

Shaft Height H	53.98 mm 2.125 in
Total Length L	191.3 mm 7.531 in
Total Width A	2.000 in 50.8 mm
Bolt Hole Spacing J	149.2 mm 5.874 in
Bolt Hole Width N	14.3 mm 0.563 in
Bolt Hole Length N1	28.6 mm 1.126 in
Base Height H1	19 mm 0.748 in
Total Height H2	106.4 mm 4.189 in
Dimension L1	63.8 mm 2.512 in
Inside Ring Width B	N/A
Center of Bearing from End S	11.2 mm 0.441 in

Basic Load Ratings

Static Load Rating	4600 lbf 20500 N
Dynamic Load Rating	8200 lbf 36300 N

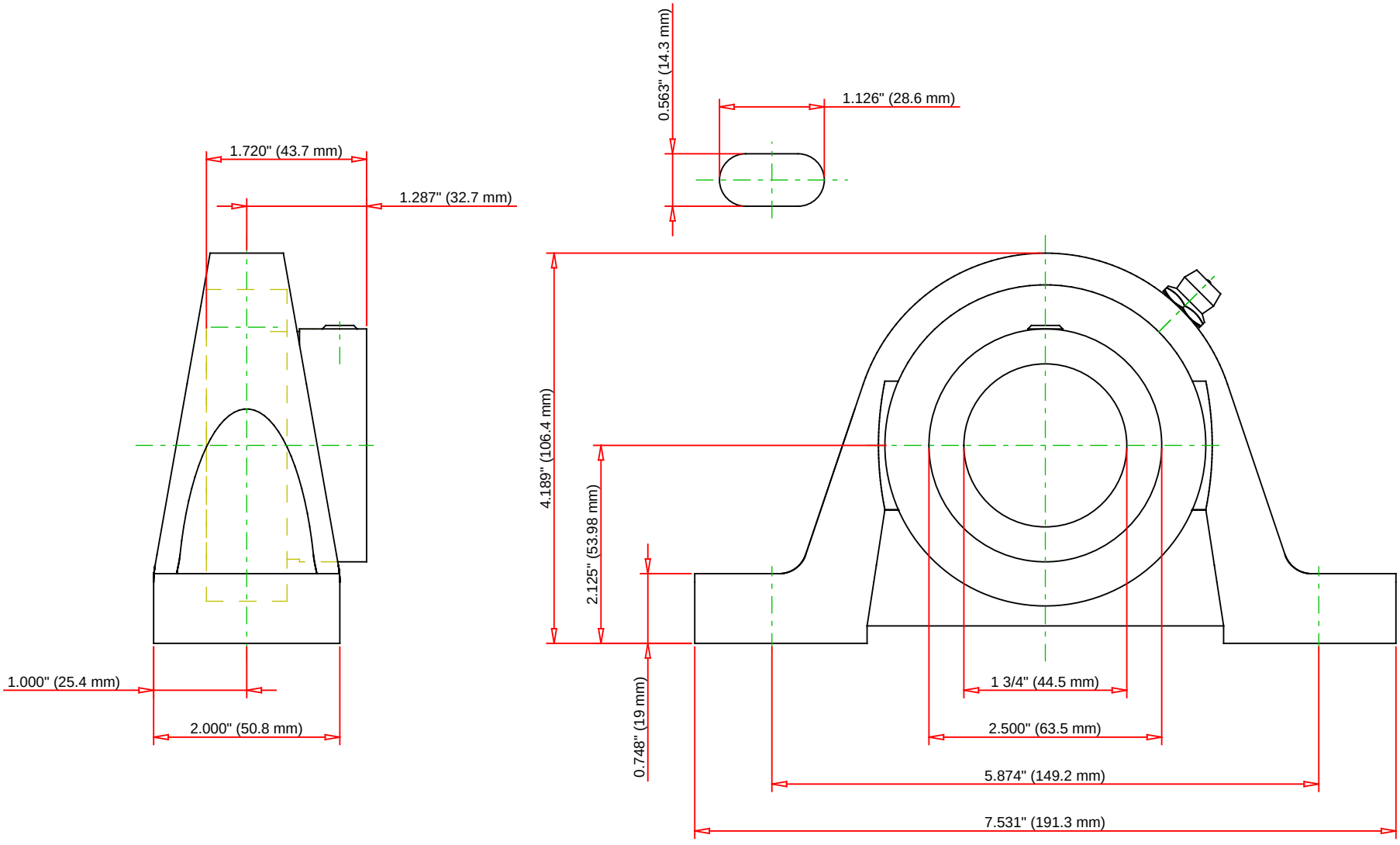

Bearing Number	GRA112RRB			
Load Ratings - C_r	8160	lbf	36300	N
Load Ratings - C_{0r}	4600	lbf	20500	N
Weight	4.985	lb	2.261	kg

TIMKEN

THE TIMKEN COMPANY
NORTH CANTON, OHIO USA

VAS 1 3/4

Pillow Block Units Eccentric Locking Collar
(Includes Industrial and Standard Series)

Every reasonable effort has been made to ensure the accuracy of the information contained in this writing, but no liability is accepted for errors, omissions or for any other reason.

FOR DISCUSSION ONLY