The Timken Company
4500 Mt Pleasant St. NW
N. Canton, OH 44720
Phone: (234) 262-3000
E-Mail: CustomerCAD@timken.com • **Web site:** www.timken.com

Timken Part Number 9386H - 9321, Tapered Roller Bearings - TS (Tapered Single) Imperial

This is the most basic and most widely used type of tapered roller bearing. It consists of two main separable parts: the cone (inner ring) assembly and the cup (outer ring). It is typically mounted in opposing pairs on a shaft.



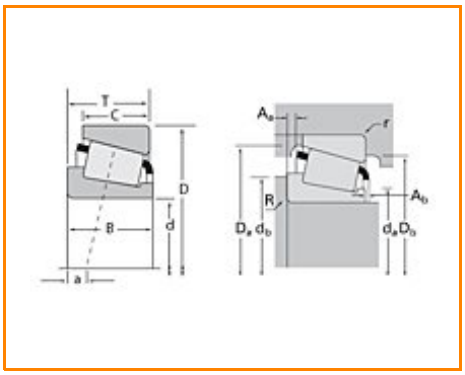

Specifications | Dimensions | Abutment and Fillet Dimensions | Basic Load Ratings | Factors

Specifications

Series	9300
Cone Part Number	9386H
Cup Part Number	9321
Design Units	Imperial
Bearing Weight	4.70 Kg 10.400 lb
Cage Type	Stamped Steel

Dimensions

d - Bore	84.138 mm 3.3125 in

D - Cup Outer Diameter	171.450 mm 6.7500 in
B - Cone Width	46.038 mm 1.8125 in
C - Cup Width	31.750 mm 1.2500 in
T - Bearing Width	49.213 mm 1.9375 in

Abutment and Fillet Dimensions

R - Cone Backface "To Clear" Radius[1]	3.560 mm 0.14 in
r - Cup Backface "To Clear" Radius[2]	3.30 mm 0.130 in
da - Cone Frontface Backing Diameter	98.30 mm 4.57 in
db - Cone Backface Backing Diameter	111.00 mm 4.37 in
Da - Cup Frontface Backing Diameter	164.10 mm 6.48 in
Db - Cup Backface Backing Diameter	147.07 mm 5.79 in
Ab - Cage-Cone Frontface Clearance	4.8 mm 0.19 in
Aa - Cage-Cone Backface Clearance	8.1 mm 0.32 in
a - Effective Center Location[3]	4.3 mm 0.17 in

Basic Load Ratings

C90 - Dynamic Radial Rating (90 million revolutions)[4]	94100 N 21200 lbf
C1 - Dynamic Radial Rating (1 million revolutions)[5]	363000 N 81600 lbf
C0 - Static Radial Rating	351000 N 78800 lbf
C_{a90} - Dynamic Thrust Rating (90 million revolutions)[6]	123000 N 27700 lbf

Factors

K - Factor[7]	0.76
e - ISO Factor[8]	0.76
Y - ISO Factor[9]	0.79
G1 - Heat Generation Factor (Roller-Raceway)	118
G2 - Heat Generation Factor (Rib-Roller End)	18.6
Cg - Geometry Factor	0.105

[1] These maximum fillet radii will be cleared by the bearing corners.
[2] These maximum fillet radii will be cleared by the bearing corners.
[3] Negative value indicates effective center inside cone backface.
[4] Based on 90 x 10^6 revolutions L_{10} life, for The Timken Company life calculation method. C_{90} and C_{a90} are radial and thrust values.
[5] Based on 1 x 10^6 revolutions L_{10} life, for the ISO life calculation method.
[6] Based on 90 x 10^6 revolutions L_{10} life, for The Timken Company life calculation method. C_{90} and C_{a90} are radial and thrust values for a single-row, $C_{90(2)}$ is the two-row radial value.
[7] These factors apply for both inch and metric calculations. Consult your Timken representative for instruction on use.
[8] These factors apply for both inch and metric calculations. Consult your Timken representative for instruction on use.
[9] These factors apply for both inch and metric calculations. Consult your Timken representative for instruction on use.

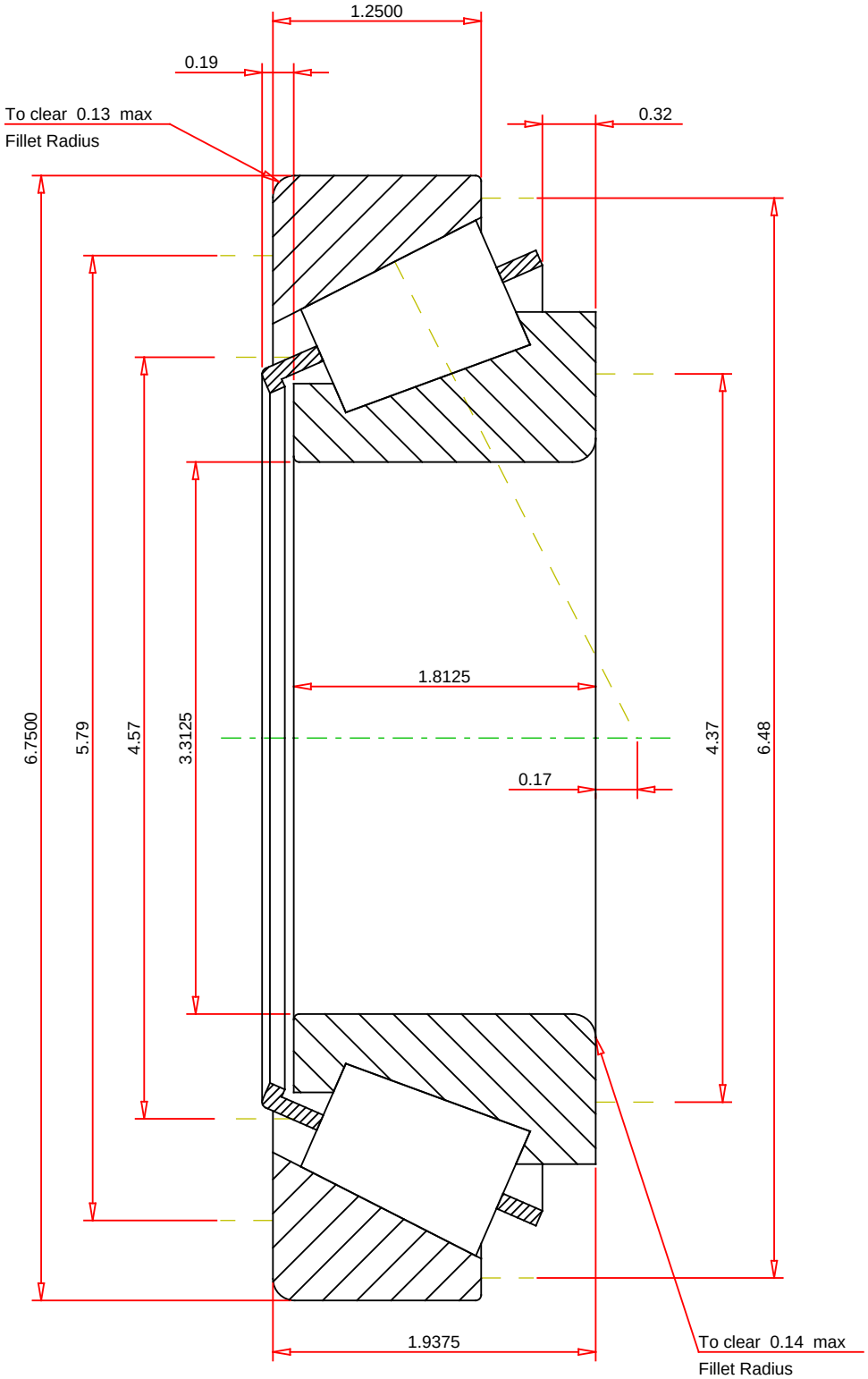

IMPERIAL UNITS

ISO Factor - e	0.76	
ISO Factor - Y	0.79	
Bearing Weight	10.4	lb
Number of Rollers Per Row	15	
Effective Center Location	0.17	inch

TIMKEN

THE TIMKEN COMPANY
NORTH CANTON, OHIO USA

9386H - 9321
TS BEARING ASSEMBLY

K Factor	0.76	
Dynamic Radial Rating - C90	94100	lbf
Dynamic Thrust Rating - Ca90	123000	lbf
Static Radial Rating - C0	351000	lbf
Dynamic Radial Rating - C1	363000	lbf

Every reasonable effort has been made to ensure the accuracy of the information contained in this writing, but no liability is accepted for errors, omissions or for any other reason.

FOR DISCUSSION ONLY