The Timken Company
4500 Mt Pleasant St. NW
N. Canton, OH 44720
Phone: (234) 262-3000
E-Mail: CustomerCAD@timken.com • **Web site:** www.timken.com

Timken Part Number 483 - 472, Tapered Roller Bearings - TS (Tapered Single) Imperial

This is the most basic and most widely used type of tapered roller bearing. It consists of two main separable parts: the cone (inner ring) assembly and the cup (outer ring). It is typically mounted in opposing pairs on a shaft.



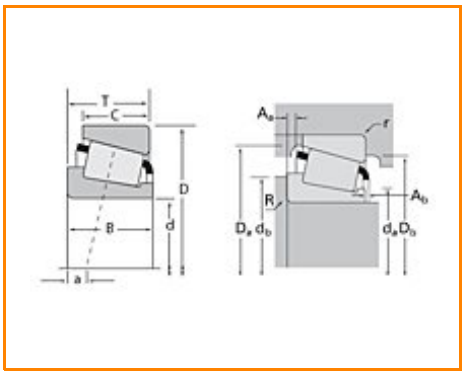

Specifications | Dimensions | Abutment and Fillet Dimensions | Basic Load Ratings | Factors

Specifications

Series	475
Cone Part Number	483
Cup Part Number	472
Design Units	Imperial
Bearing Weight	1.500 Kg 3.200 lb
Cage Type	Stamped Steel

Dimensions

d - Bore	63.500 mm 2.5000 in

D - Cup Outer Diameter	120.000 mm 4.7244 in
B - Cone Width	29.007 mm 1.1420 in
C - Cup Width	24.237 mm 0.9542 in
T - Bearing Width	29.794 mm 1.1730 in

Abutment and Fillet Dimensions

R - Cone Backface "To Clear" Radius[1]	3.560 mm 0.14 in
r - Cup Backface "To Clear" Radius[2]	2.03 mm 0.08 in
da - Cone Frontface Backing Diameter	71.88 mm 3.50 in
db - Cone Backface Backing Diameter	77.98 mm 3.07 in
Da - Cup Frontface Backing Diameter	115.06 mm 4.53 in
Db - Cup Backface Backing Diameter	106.93 mm 4.21 in
Ab - Cage-Cone Frontface Clearance	3 mm 0.12 in
Aa - Cage-Cone Backface Clearance	1 mm 0.04 in
a - Effective Center Location[3]	-4.10 mm -0.16 in

Basic Load Ratings

C90 - Dynamic Radial Rating (90 million revolutions)[4]	37200 N 8360 lbf
C1 - Dynamic Radial Rating (1 million revolutions)[5]	143000 N 32200 lbf
C0 - Static Radial Rating	186000 N 41900 lbf
C_{a90} - Dynamic Thrust Rating (90 million revolutions)[6]	24500 N 5500 lbf

Factors

K - Factor[7]	1.52
e - ISO Factor[8]	0.38
Y - ISO Factor[9]	1.56
G1 - Heat Generation Factor (Roller-Raceway)	77.2
G2 - Heat Generation Factor (Rib-Roller End)	23
Cg - Geometry Factor	0.108

[1] These maximum fillet radii will be cleared by the bearing corners.
[2] These maximum fillet radii will be cleared by the bearing corners.
[3] Negative value indicates effective center inside cone backface.
[4] Based on 90 x 10^6 revolutions L_{10} life, for The Timken Company life calculation method. C_{90} and C_{a90} are radial and thrust values.
[5] Based on 1 x 10^6 revolutions L_{10} life, for the ISO life calculation method.
[6] Based on 90 x 10^6 revolutions L_{10} life, for The Timken Company life calculation method. C_{90} and C_{a90} are radial and thrust values for a single-row, $C_{90(2)}$ is the two-row radial value.
[7] These factors apply for both inch and metric calculations. Consult your Timken representative for instruction on use.
[8] These factors apply for both inch and metric calculations. Consult your Timken representative for instruction on use.
[9] These factors apply for both inch and metric calculations. Consult your Timken representative for instruction on use.

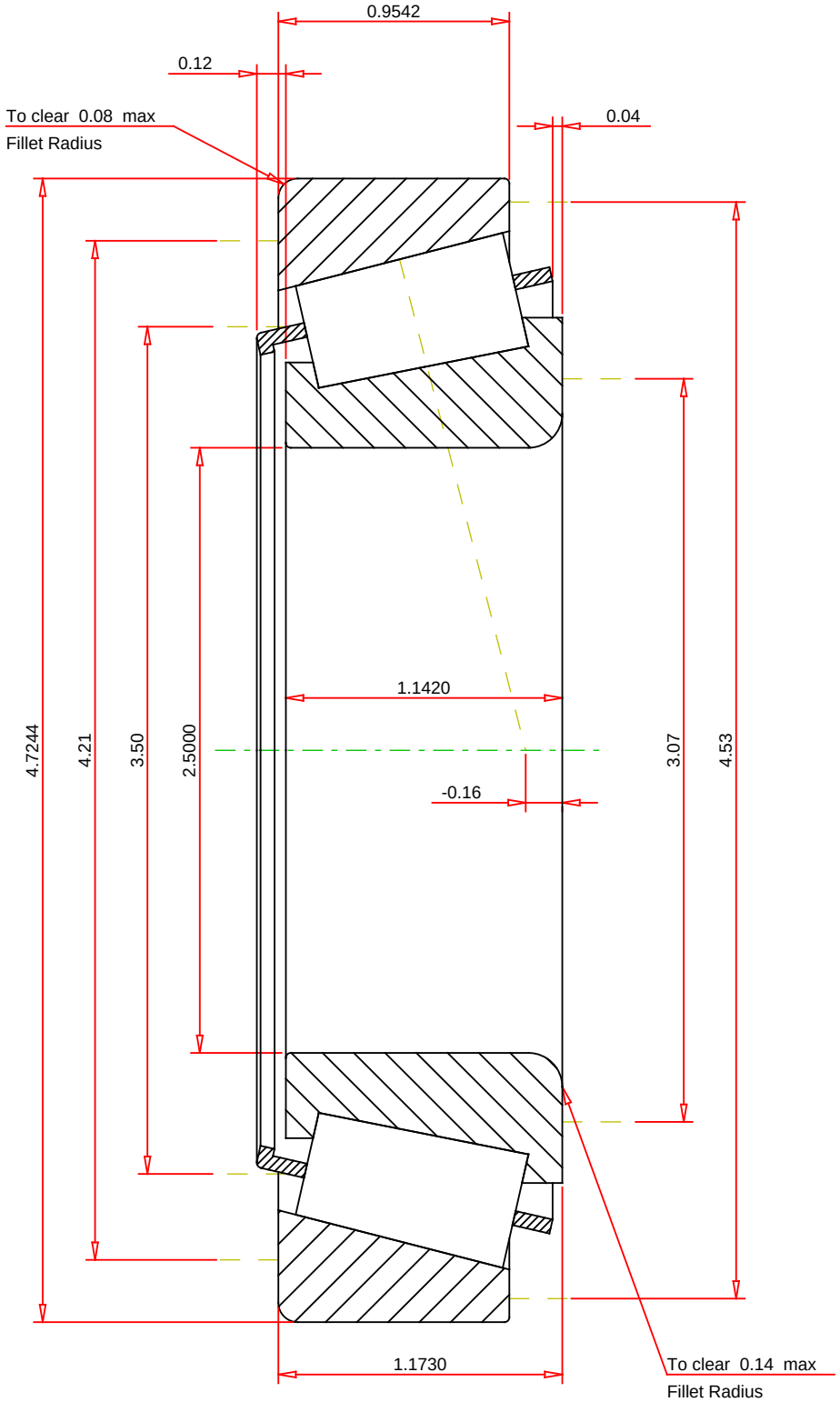

IMPERIAL UNITS

ISO Factor - e	0.38	
ISO Factor - Y	1.56	
Bearing Weight	3.2	lb
Number of Rollers Per Row	20	
Effective Center Location	-0.16	inch

TIMKEN®

THE TIMKEN COMPANY
NORTH CANTON, OHIO USA

483 - 472
TS BEARING ASSEMBLY

K Factor	1.52	
Dynamic Radial Rating - C90	37200	lbf
Dynamic Thrust Rating - Ca90	24500	lbf
Static Radial Rating - C0	186000	lbf
Dynamic Radial Rating - C1	143000	lbf

Every reasonable effort has been made to ensure the accuracy of the information contained in this writing, but no liability is accepted for errors, omissions or for any other reason.

FOR DISCUSSION ONLY