The Timken Company
4500 Mt Pleasant St. NW
N. Canton, OH 44720
Phone: (234) 262-3000
E-Mail: CustomerCAD@timken.com • **Web site:** www.timken.com

Part Number 62212-2RS, Wide Section Ball Bearings (62000, 63000)

Timken's deep groove ball bearings deliver reliable performance in a wide range of applications and conditions. With super-finished raceways and controlled geometries, our premium design helps ensure consistent quality.



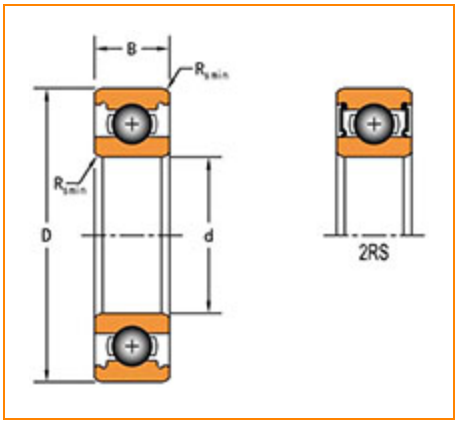

Specifications | Dimensions | Basic Load Ratings | Factors

Specifications

Clearance	C0 (Normal)
Bore Size d	60 mm
Features	Contact Seals
Weight	1.0 Kg
Grease Reference Speed	7500 rpm

Dimensions

Outside Diameter D	110.000 mm
Outside Ring Width B	28.000 mm

Radius Rs min	1.500 mm

Basic Load Ratings

Cr - Dynamic Load Rating	52.7 kN
C0r - Static Load Rating	36 kN

Factors

Grease Limiting Speed	7500 rpm

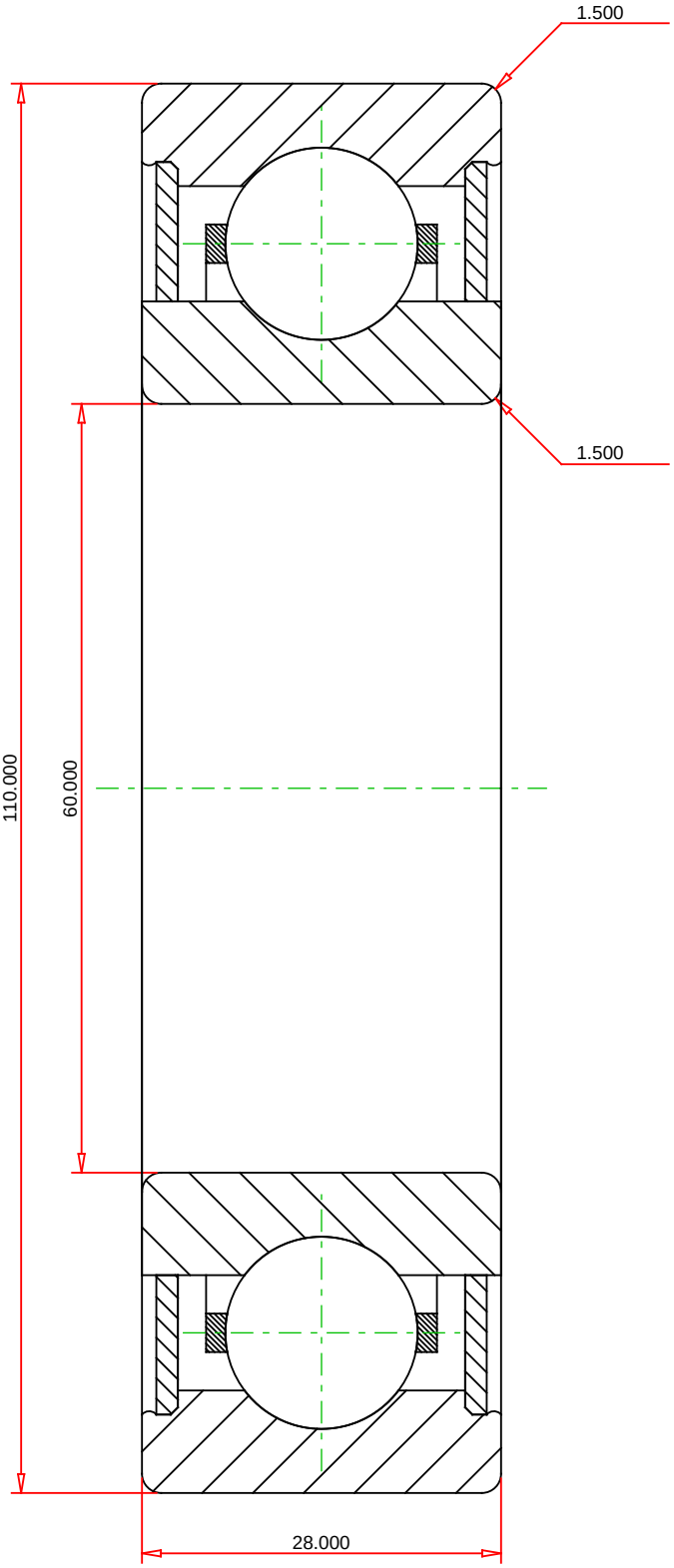

METRIC UNITS

Weight	1	kg

TIMKEN®

THE TIMKEN COMPANY
NORTH CANTON, OHIO USA

62212-2RS
Wide Section Ball Bearings (62000, 63000)

Dynamic Load Rating	47500	N
Static Load Rating	32500	N

Every reasonable effort has been made to ensure the accuracy of the information contained in this writing, but no liability is accepted for errors, omissions or for any other reason.

FOR DISCUSSION ONLY