The Timken Company
4500 Mt Pleasant St. NW
N. Canton, OH 44720
Phone: (234) 262-3000
E-Mail: CustomerCAD@timken.com • **Web site:** www.timken.com

Timken Part Number GYE30KRRB SGT, Fafnir® Setscrew Locking Ball Bearings



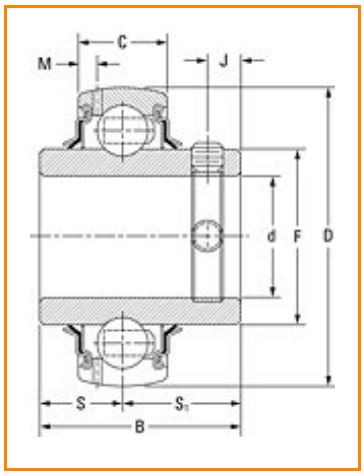

Specifications | Dimensions | Basic Load Ratings

Specifications

Bore Size d	1.181 in 30 mm
Bore Type	Cylindrical bore
Bearing Type	Ball Bearing
Seal Type	Shroud Seal
Material	Bearing Steel
Lubrication Type	Relubricatable
O.D. Type	Spherical OD
Dimension M	0.156 in 3.96 mm
Series	Industrial

Weight	0.500 lb 0.200 Kg
Sub Series	GYE..KRRB SGT

Dimensions

Outside Diameter D	2.441 in 62.000 mm
Inside Ring Width B	39.1 mm 1.539 in
Outside Ring Width C	18.000 mm 0.709 in
Radius r	0.6 mm 0.024 in
Center of Bearing from End S	15.88 mm 0.625 in
Dimension S1	23.24 mm 0.915 in
Set Screw Distance S2	8.63 mm 0.340 in
Set Screw Size	M6X1
Number of Set Screws	2
Angle between Set Screws	90 °

Basic Load Ratings

Static Load Rating	2500 lbf 11000 N
Dynamic Load Rating	4800 lbf 21600 N

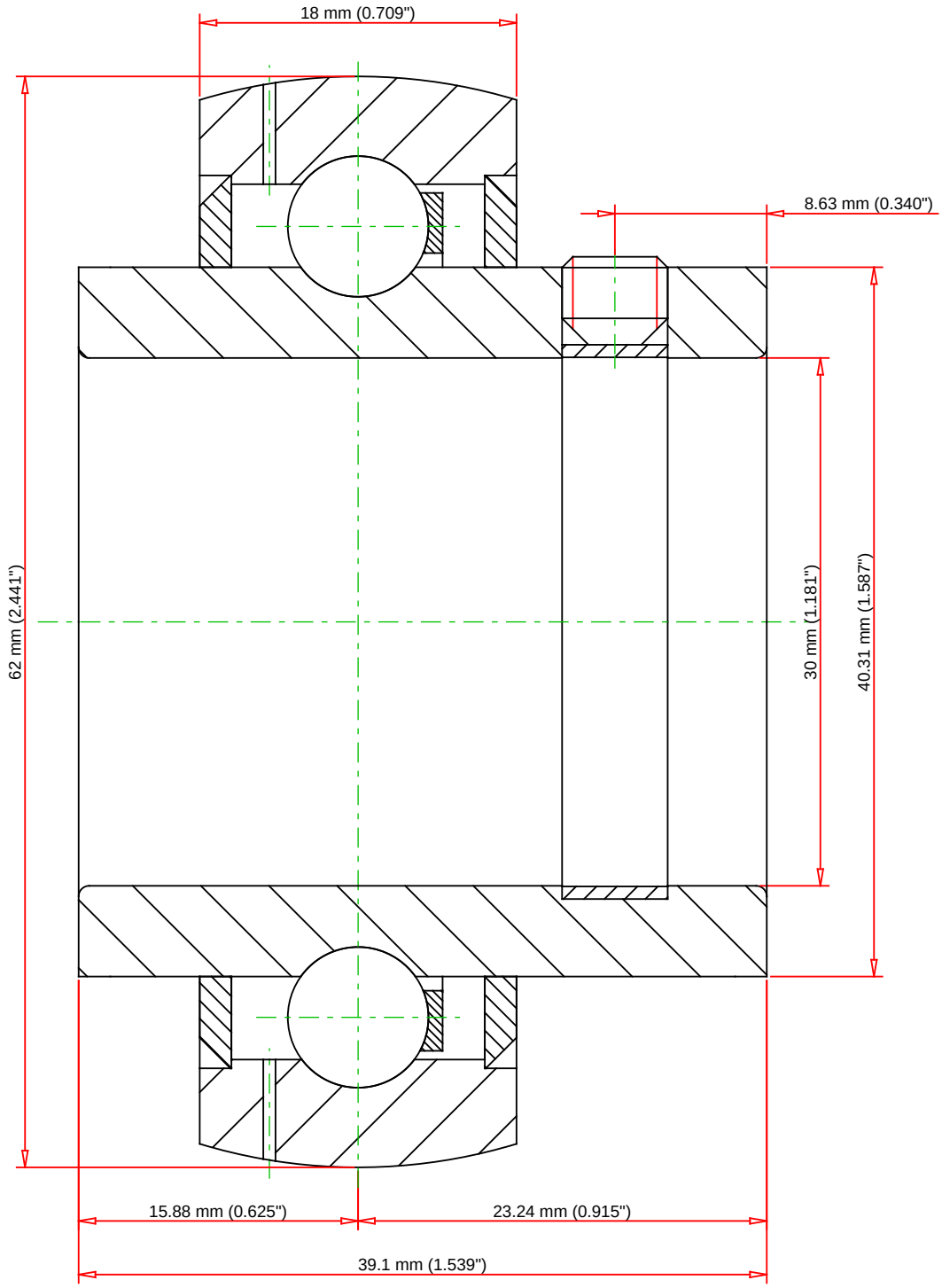

Weight	0.5 lb	0.2 kg

TIMKEN®

THE TIMKEN COMPANY
NORTH CANTON, OHIO USA

GYE30KRRB SGT

Fafnir® Setscrew Locking Ball Bearings

Basic Load Ratings - C_r	4800 lbf	21600 N
Load Ratings - C_{0r}	2500 lbf	11000 N

Every reasonable effort has been made to ensure the accuracy of the information contained in this writing, but no liability is accepted for errors, omissions or for any other reason.

FOR DISCUSSION ONLY