The Timken Company
4500 Mt Pleasant St. NW
N. Canton, OH 44720
Phone: (234) 262-3000
E-Mail: CustomerCAD@timken.com • **Web site:** www.timken.com

Timken Part Number JHM840449 - JHM840410, Tapered Roller Bearings - TS (Tapered Single) Metric

This is the most basic and most widely used type of tapered roller bearing. It consists of two main separable parts: the cone (inner ring) assembly and the cup (outer ring). It is typically mounted in opposing pairs on a shaft.



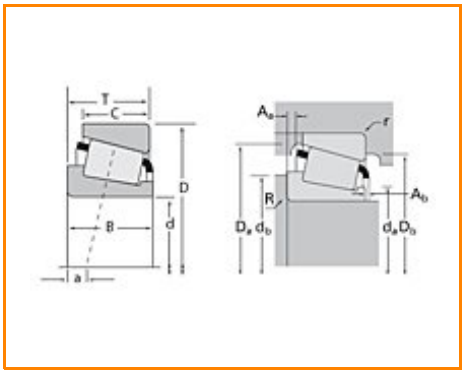

Specifications | Dimensions | Abutment and Fillet Dimensions | Basic Load Ratings | Factors

Specifications

Series	HM840400
Cone Part Number	JHM840449
Cup Part Number	JHM840410
Design Units	METRIC
Bearing Weight	15.300 Kg 33.80 lb
Cage Type	Stamped Steel

Dimensions

d - Bore	200 mm 7.874 in
D - Cup Outer Diameter	300 mm 11.811 in
B - Cone Width	62 mm 2.4409 in
C - Cup Width	51.000 mm 2.0079 in
T - Bearing Width	65.000 mm 2.5591 in

Abutment and Fillet Dimensions

R - Cone Backface "To Clear" Radius[1]	3.560 mm 0.14 in
r - Cup Backface "To Clear" Radius[2]	2.54 mm 0.1 in
da - Cone Frontface Backing Diameter	214.88 mm 8.46 in
db - Cone Backface Backing Diameter	226.06 mm 8.90 in
Da - Cup Frontface Backing Diameter	290.07 mm 11.42 in
Db - Cup Backface Backing Diameter	273.05 mm 10.75 in
Ab - Cage-Cone Frontface Clearance	7.1 mm 0.28 in
Aa - Cage-Cone Backface Clearance	3.8 mm 0.15 in
a - Effective Center Location[3]	8.10 mm 0.32 in

Basic Load Ratings

C90 - Dynamic Radial Rating (90 million revolutions)[4]	180000 N 40500 lbf
C1 - Dynamic Radial Rating (1 million revolutions)[5]	695000 N 156000 lbf
C0 - Static Radial Rating	1280000 N 287000 lbf
C_{a90} - Dynamic Thrust Rating (90 million revolutions)[6]	161000 N 36200 lbf

Factors

K - Factor[7]	1.12
e - ISO Factor[8]	0.52
Y - ISO Factor[9]	1.15
G1 - Heat Generation Factor (Roller-Raceway)	854
G2 - Heat Generation Factor (Rib-Roller End)	126
Cg - Geometry Factor	0.143

[1] These maximum fillet radii will be cleared by the bearing corners.

[2] These maximum fillet radii will be cleared by the bearing corners.

[3] Negative value indicates effective center inside cone backface.

[4] Based on 90 x 10^6 revolutions L_{10} life, for The Timken Company life calculation method. C_{90} and C_{a90} are radial and thrust values.

[5] Based on 1 x 10^6 revolutions L_{10} life, for the ISO life calculation method.

[6] Based on 90 x 10^6 revolutions L_{10} life, for The Timken Company life calculation method. C_{90} and C_{a90} are radial and thrust values for a single-row, $C_{90(2)}$ is the two-row radial value.

[7] These factors apply for both inch and metric calculations. Consult your Timken representative for instruction on use.

[8] These factors apply for both inch and metric calculations. Consult your Timken representative for instruction

on use.

[9] These factors apply for both inch and metric calculations. Consult your Timken representative for instruction on use.

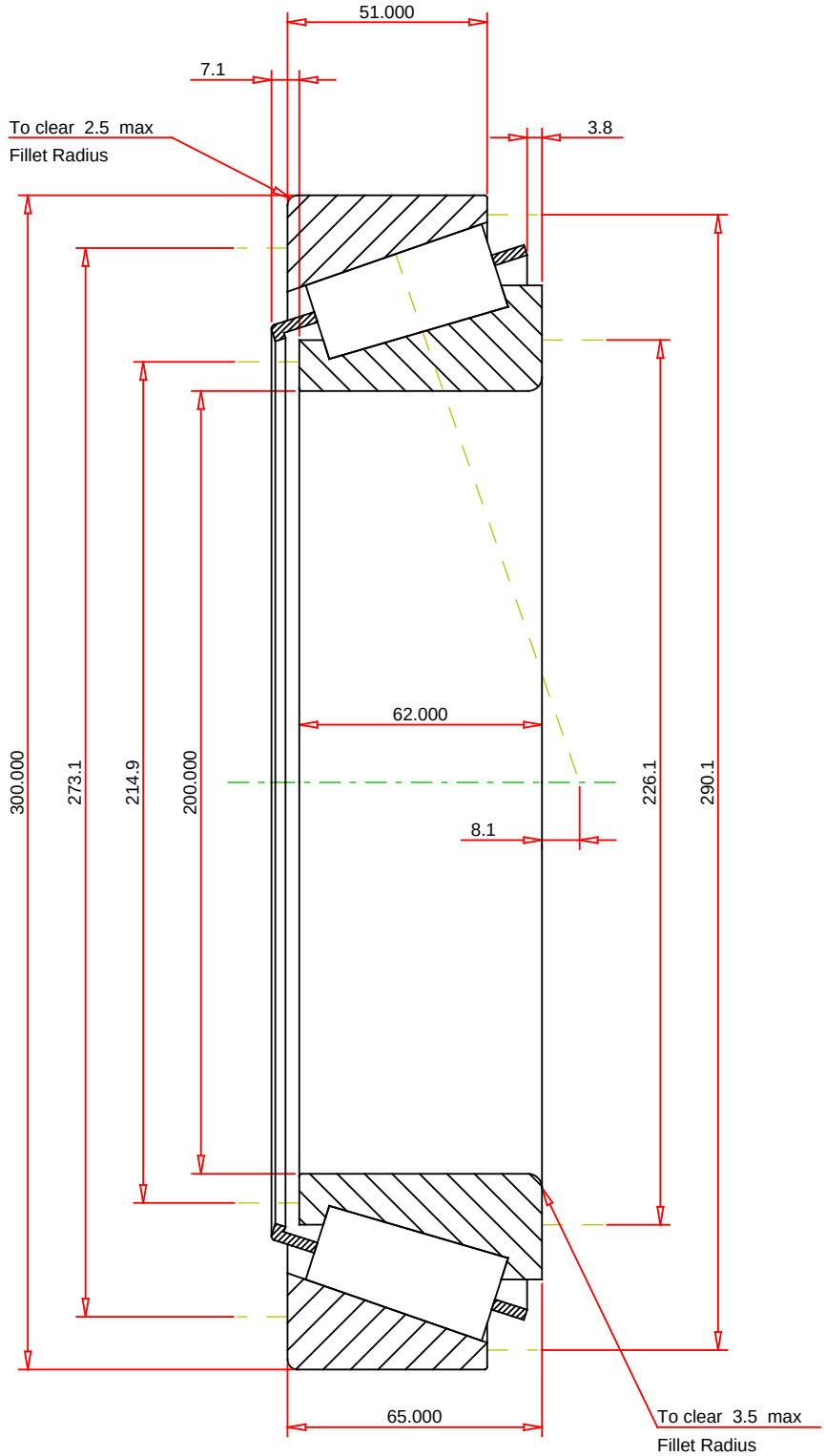

METRIC UNITS

ISO Factor - e	0.52	
ISO Factor - Y	1.15	
Bearing Weight	15.3	kg
Number of Rollers Per Row	27	
Effective Center Location	8.1	mm

TIMKEN®

THE TIMKEN COMPANY
NORTH CANTON, OHIO USA

JHM840449 - JHM840410
TS BEARING ASSEMBLY

K Factor	1.12	
Dynamic Radial Rating - C90	180000	N
Dynamic Thrust Rating - Ca90	161000	N
Static Radial Rating - C0	1280000	N
Dynamic Radial Rating - C1	695000	N

Every reasonable effort has been made to ensure the accuracy of the information contained in this writing, but no liability is accepted for errors, omissions or for any other reason.

FOR DISCUSSION ONLY