The Timken Company
4500 Mt Pleasant St. NW
N. Canton, OH 44720
Phone: (234) 262-3000
E-Mail: CustomerCAD@timken.com • **Web site:** www.timken.com

Timken Part Number GRA107RRB, Fafnir® Eccentric Locking Collar Ball Bearings



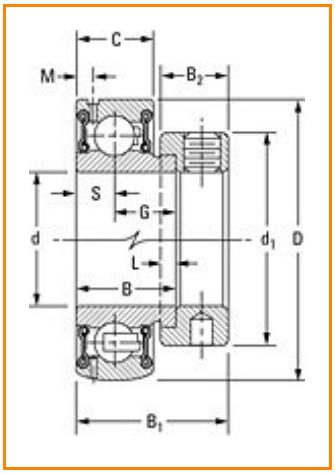

Specifications | Dimensions | Basic Load Ratings

Specifications

Bore Size d	1 7/16 in 36.5 mm
Bore Type	Cylindrical bore
Bearing Type	Ball Bearing
Seal Type	Molded Shroud
Material	Bearing Steel
Lubrication Type	Relubricatable
O.D. Type	Spherical OD
Dimension M	0.145 in 3.68 mm
Dimension B1	1.531 in 38.9 mm

Dimension B2	0.673 in 17.1 mm
Series	Standard
Weight	0.500 lb 0.200 Kg
Sub Series	GRA..RRB

Dimensions

Outside Diameter D	2.835 in 72.000 mm
Inside Ring Width B	25.4 mm 1.000 in
Outside Ring Width C	19.000 mm 0.748 in
Radius r	0.6 mm 0.024 in
Center of Bearing from End S	9.5 mm 0.374 in
Dimension S1	29.4 mm 1.157 in
Set Screw Size	3/8-16
Number of Set Screws	2
Angle between Set Screws	90 º

Basic Load Ratings

Static Load Rating	3400 lbf 15100 N

Dynamic Load Rating	6400 lbf 28500 N

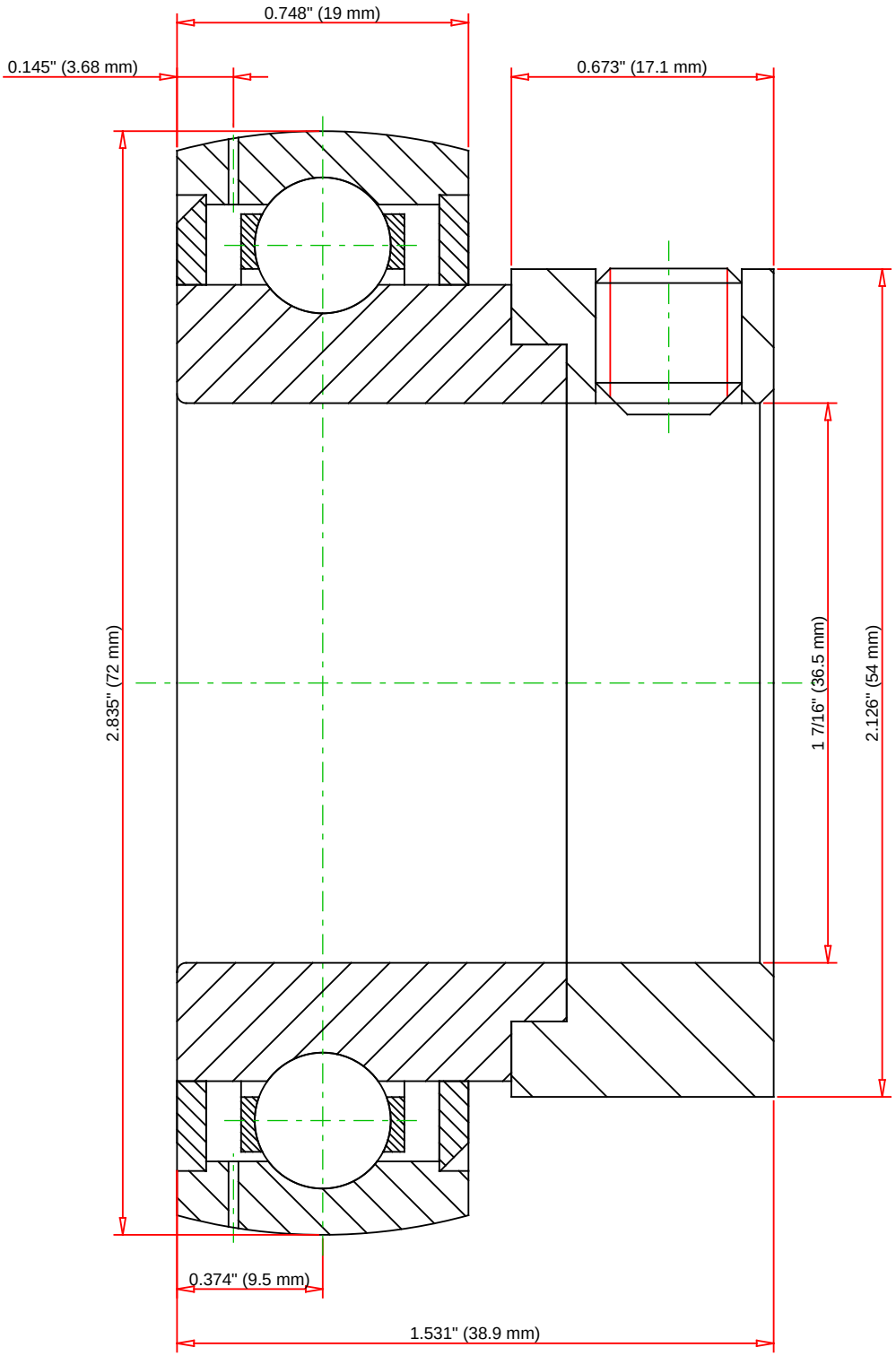

Weight	0.5 lb	0.2 kg

TIMKEN®

THE TIMKEN COMPANY
NORTH CANTON, OHIO USA

GRA107RRB

Fafnir® Eccentric Locking Collar Ball Bearings

Basic Load Ratings - C_r	6400 lbf	28500 N
Load Ratings - C_{0r}	3400 lbf	15100 N

Every reasonable effort has been made to ensure the accuracy of the information contained in this writing, but no liability is accepted for errors, omissions or for any other reason.

FOR DISCUSSION ONLY