The Timken Company
4500 Mt Pleasant St. NW
N. Canton, OH 44720
Phone: (234) 262-3000
E-Mail: CustomerCAD@timken.com • **Web site:** www.timken.com

Timken Part Number TCJT 1, Two-Bolt Flanged Units Eccentric Locking Collar (Includes Industrial and Standard Series)



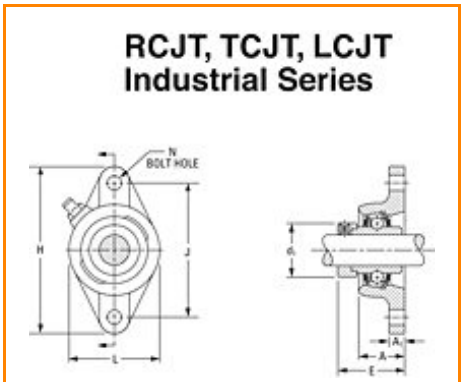

Specifications | Dimensions | Basic Load Ratings

Specifications

Bore Size d	1 in 25.4 mm
Bearing Number	G1100KPPB3
Dimension E	1.839 in 46.7 mm
Inside Ring Outside Diameter	0.941 in 23.9 mm
e	0.072 in 1.839 mm
Series	Industrial
Weight	1.731 lb 0.785 Kg

Seal Type	Tri-Ply Seal

Dimensions

Total Width A	27.9 mm 1.098 in
Total Length H	123.8 mm 4.874 in
Total Height L	69.8 mm 2.748 in
Bolt Hole Spacing J	99.2 mm 3.906 in
Bolt Hole Size N	11.5 mm 0.453 in
Flange Thickness A1	11.1 mm 0.437 in
Center of Bearing from Housing End A2	0.778 mm 0.031 in
Inside Ring Width B	0 mm 0.000 in

Basic Load Ratings

Static Load Rating	3600 lbf 15800 N
Dynamic Load Rating	1700 lbf 7700 N

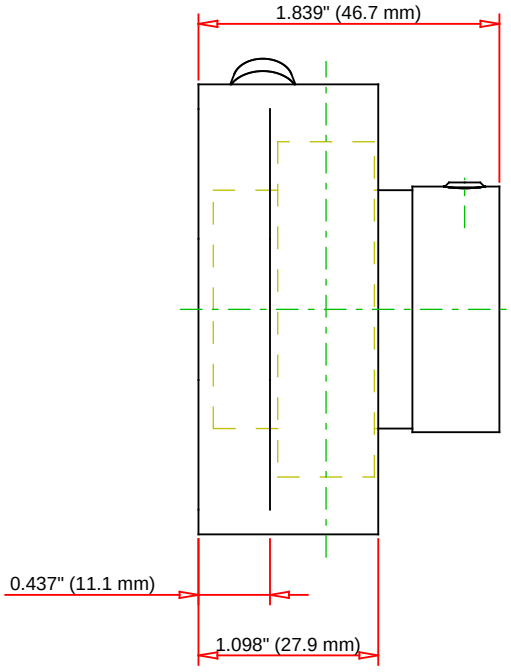

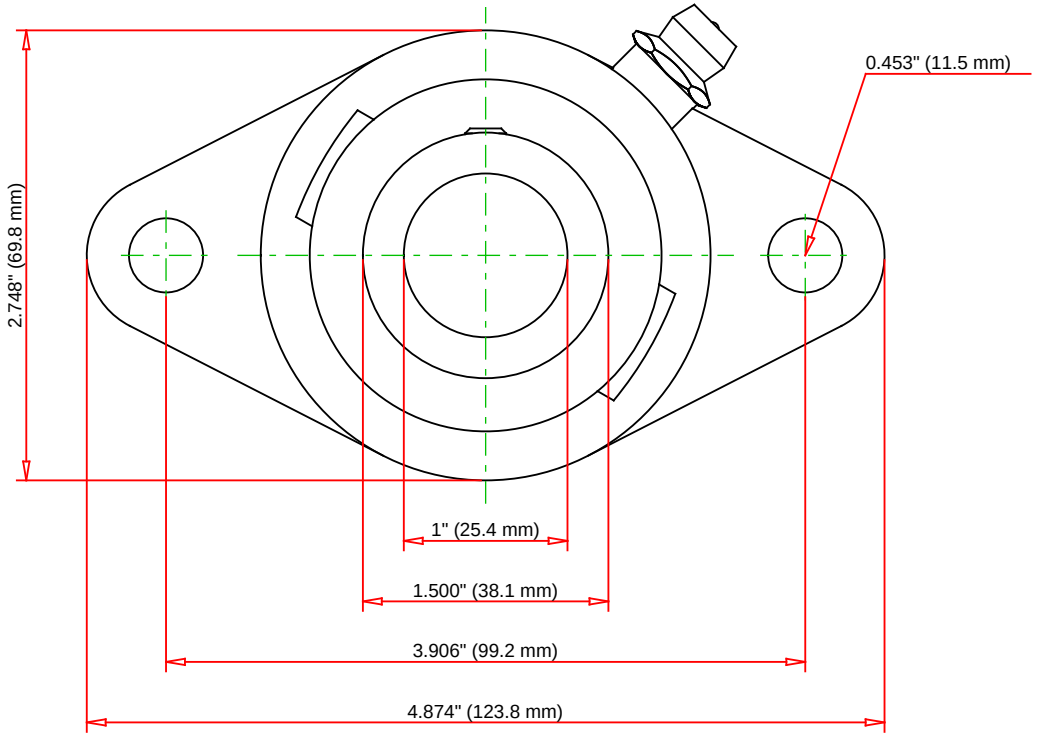

Bearing Number	G1100KPPB3			
Load Ratings - C_r	3550	lbf	15800	N
Load Ratings - C_{0r}	1730	lbf	7700	N
Weight	1.731	lb	0.785	kg

TIMKEN

THE TIMKEN COMPANY
NORTH CANTON, OHIO USA

TCJT 1

Two-Bolt Flanged Units Eccentric Locking Collar
(Includes Industrial and Standard Series)

Every reasonable effort has been made to ensure the accuracy of the information contained in this writing, but no liability is accepted for errors, omissions or for any other reason.

FOR DISCUSSION ONLY