The Timken Company
4500 Mt Pleasant St. NW
N. Canton, OH 44720
Phone: (234) 262-3000
E-Mail: CustomerCAD@timken.com • **Web site:** www.timken.com

Timken Part Number HMVC - 44, Inch HMVC Hydraulic Nut

HMVC - 10 through HMVC - 64 have American National Threads Class 3.
HMVC - 68 through HMVC - 190 have Acme General Purpose Threads Class 3G.

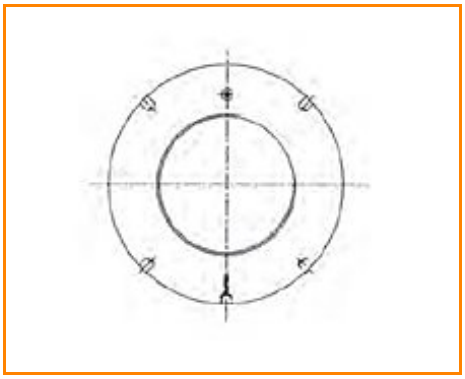

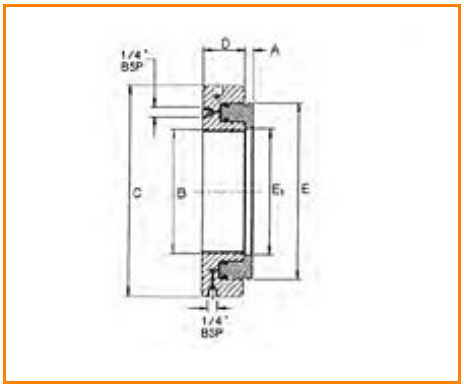

Specifications

Major Diameter B	8.628 in
Threads No. per Inch	8
C	12.008 in
D	1.7320 in
E	10.748 in
E_1	8.740 in
A	0.3150 in
Piston Length of Travel	0.354 in
Piston Area	22.3 in²
Assembly Weight	29.5 lb