The Timken Company
4500 Mt Pleasant St. NW
N. Canton, OH 44720
Phone: (234) 262-3000
E-Mail: CustomerCAD@timken.com • **Web site:** www.timken.com

Timken Part Number VCJT 1, Two-Bolt Flanged Units Eccentric Locking Collar (Includes Industrial and Standard Series)



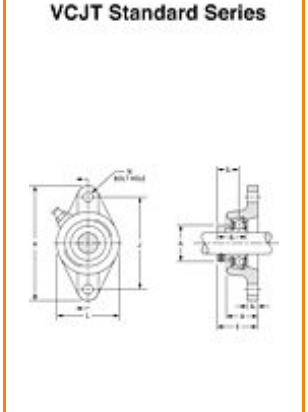

Specifications | Dimensions | Basic Load Ratings

Specifications

Bore Size d	1 in 25.4 mm
Bearing Number	GRA100RRB
Dimension E	1.701 in 43.2 mm
Inside Ring Outside Diameter	0.941 in 23.9 mm
Series	Standard
Weight	1.631 lb 0.740 Kg
Seal Type	Molded Shroud

Dimensions

Total Width A	27.9 mm 1.098 in
Total Length H	123.8 mm 4.874 in
Total Height L	69.8 mm 2.748 in
Bolt Hole Spacing J	99.2 mm 3.906 in
Bolt Hole Size N	11.5 mm 0.453 in
Flange Thickness A1	11.1 mm 0.437 in
Center of Bearing from Housing End A2	19.8 mm 0.780 in
Inside Ring Width B	31 mm 1.220 in
Center of Bearing from Bearing End S	19.8 mm 0.780 in

Basic Load Ratings

Static Load Rating	3600 lbf 15800 N
Dynamic Load Rating	1700 lbf 7700 N

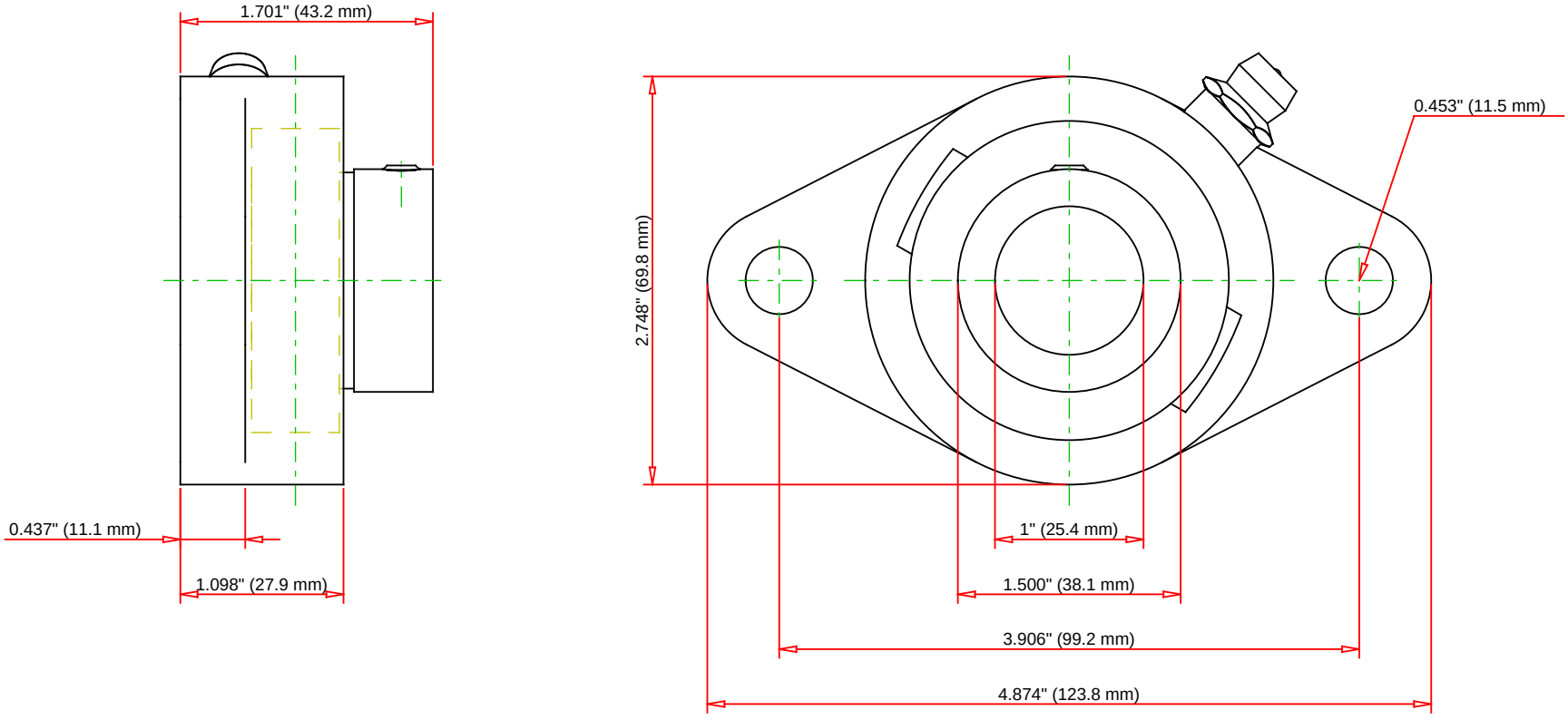

Bearing Number	GRA100RRB			
Load Ratings - C_r	3550	lbf	15800	N
Load Ratings - C_{0r}	1730	lbf	7700	N
Weight	1.631	lb	0.74	kg

TIMKEN

THE TIMKEN COMPANY
NORTH CANTON, OHIO USA

VCJT 1

Two-Bolt Flanged Units Eccentric Locking Collar
(Includes Industrial and Standard Series)

Every reasonable effort has been made to ensure the accuracy of the information contained in this writing, but no liability is accepted for errors, omissions or for any other reason.

FOR DISCUSSION ONLY