The Timken Company
4500 Mt Pleasant St. NW
N. Canton, OH 44720
Phone: (234) 262-3000
E-Mail: CustomerCAD@timken.com • **Web site:** www.timken.com

Timken Part Number HH932145 - HH932110, Tapered Roller Bearings - TS (Tapered Single) Imperial

This is the most basic and most widely used type of tapered roller bearing. It consists of two main separable parts: the cone (inner ring) assembly and the cup (outer ring). It is typically mounted in opposing pairs on a shaft.



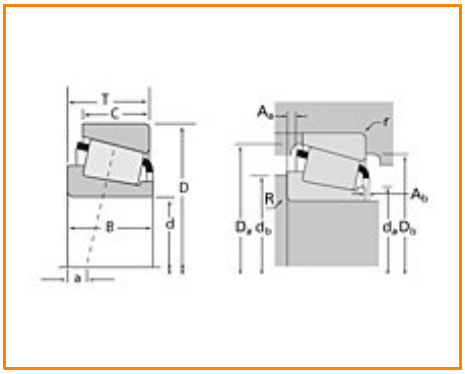

Specifications | Dimensions | Abutment and Fillet Dimensions | Basic Load Ratings | Factors

Specifications

Series	HH932100
Cone Part Number	HH932145
Cup Part Number	HH932110
Design Units	Imperial
Bearing Weight	26.90 Kg 59.400 lb
Cage Type	Stamped Steel

Dimensions

d - Bore	146.050 mm 5.7500 in
D - Cup Outer Diameter	304.8 mm 12 in
B - Cone Width	82.550 mm 3.2500 in
C - Cup Width	57.150 mm 2.2500 in
T - Bearing Width	88.900 mm 3.5000 in

Abutment and Fillet Dimensions

R - Cone Backface "To Clear" Radius[1]	6.35 mm 0.25 in
r - Cup Backface "To Clear" Radius[2]	6.35 mm 0.250 in
da - Cone Frontface Backing Diameter	174.50 mm 7.76 in
db - Cone Backface Backing Diameter	195.07 mm 7.68 in
Da - Cup Frontface Backing Diameter	288.50 mm 11.36 in
Db - Cup Backface Backing Diameter	260.10 mm 10.24 in
Ab - Cage-Cone Frontface Clearance	9.9 mm 0.39 in
Aa - Cage-Cone Backface Clearance	20.1 mm 0.79 in
a - Effective Center Location[3]	1.8 mm 0.07 in

Basic Load Ratings

C90 - Dynamic Radial Rating (90 million revolutions)[4]	300000 N 67500 lbf
C1 - Dynamic Radial Rating (1 million revolutions)[5]	1160000 N 260000 lbf
C0 - Static Radial Rating	1250000 N 282000 lbf
C_{a90} - Dynamic Thrust Rating (90 million revolutions)[6]	374000 N 84100 lbf

Factors

K - Factor[7]	0.8
e - ISO Factor[8]	0.73
Y - ISO Factor[9]	0.82
G1 - Heat Generation Factor (Roller-Raceway)	514
G2 - Heat Generation Factor (Rib-Roller End)	55.6
Cg - Geometry Factor	0.133

[1] These maximum fillet radii will be cleared by the bearing corners.

[2] These maximum fillet radii will be cleared by the bearing corners.

[3] Negative value indicates effective center inside cone backface.

[4] Based on 90 x 10^6 revolutions L_{10} life, for The Timken Company life calculation method. C_{90} and C_{a90} are radial and thrust values.

[5] Based on 1 x 10^6 revolutions L_{10} life, for the ISO life calculation method.

[6] Based on 90 x 10^6 revolutions L_{10} life, for The Timken Company life calculation method. C_{90} and C_{a90} are radial and thrust values for a single-row, $C_{90(2)}$ is the two-row radial value.

[7] These factors apply for both inch and metric calculations. Consult your Timken representative for instruction on use.

[8] These factors apply for both inch and metric calculations. Consult your Timken representative for instruction

on use.

[9] These factors apply for both inch and metric calculations. Consult your Timken representative for instruction on use.

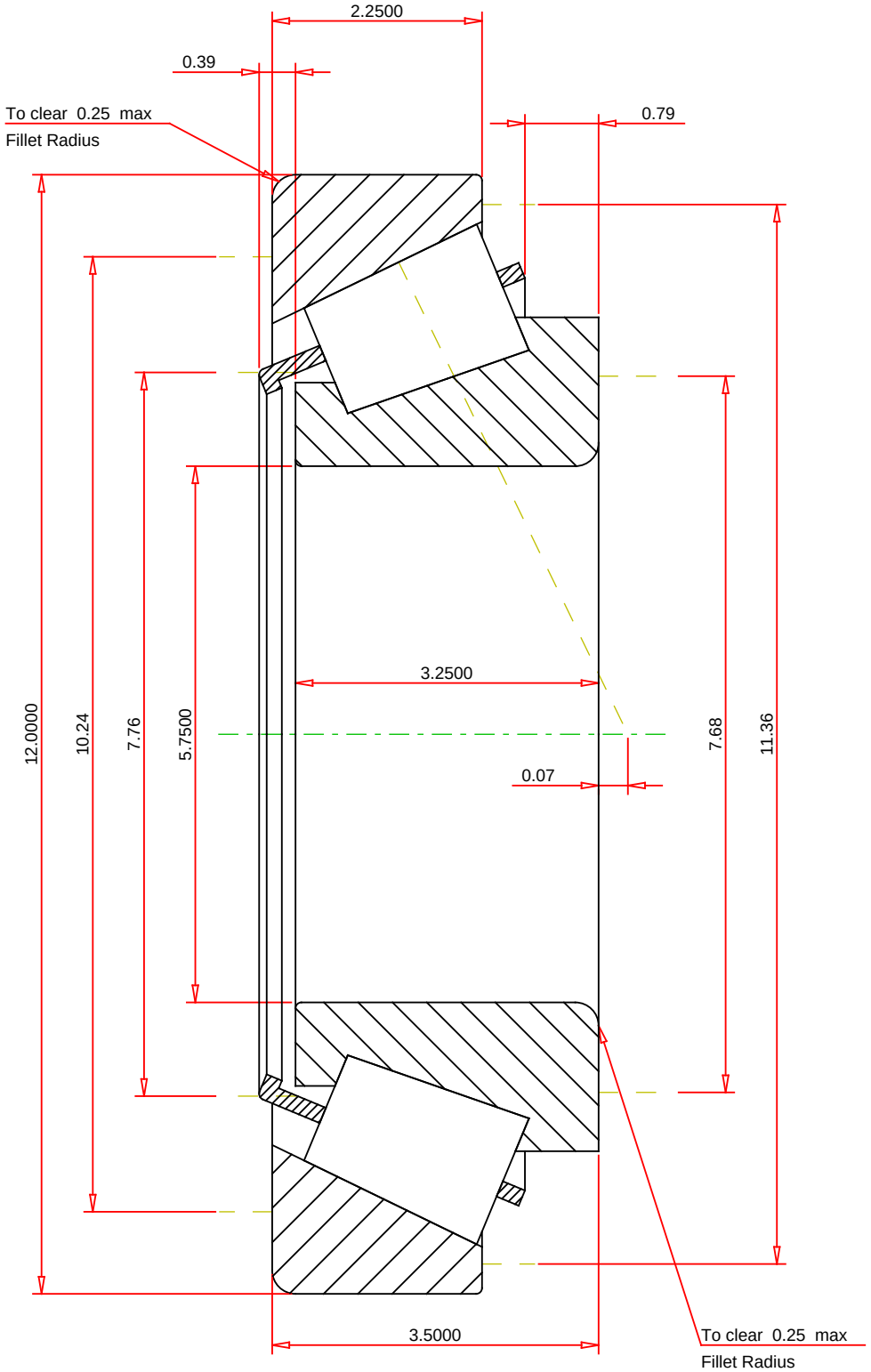

IMPERIAL UNITS

ISO Factor - e	0.73	
ISO Factor - Y	0.82	
Bearing Weight	59.4	lb
Number of Rollers Per Row	16	
Effective Center Location	0.07	inch

TIMKEN

THE TIMKEN COMPANY
NORTH CANTON, OHIO USA

HH932145 - HH932110
TS BEARING ASSEMBLY

K Factor	0.8	
Dynamic Radial Rating - C90	300000	lbf
Dynamic Thrust Rating - Ca90	374000	lbf
Static Radial Rating - C0	1250000	lbf
Dynamic Radial Rating - C1	1160000	lbf

Every reasonable effort has been made to ensure the accuracy of the information contained in this writing, but no liability is accepted for errors, omissions or for any other reason.

FOR DISCUSSION ONLY