The Timken Company
4500 Mt Pleasant St. NW
N. Canton, OH 44720
Phone: (234) 262-3000
E-Mail: CustomerCAD@timken.com • **Web site:** www.timken.com

Timken Part Number N 08-W 08, Inch Accessories - Locknut and Lockwasher

- The chart below shows dimensions for locknuts and lockwashers used in the mounting of straight bore bearings on shafts.
- Other dimensions and tolerances related to shaft configurations are also shown.
- Dimensions are presented according to bearing bore size and are applicable to bearings in the various series (e.g., 222 and 223 etc.).

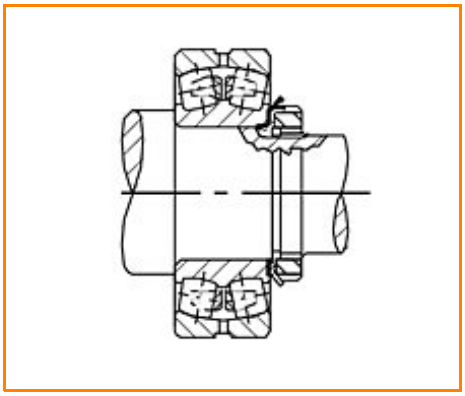

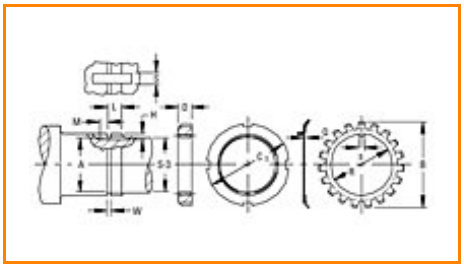

Specifications | Threads | Shaft | Locknut | Lockwasher

Specifications

Bearing Bore	40 mm
Threads No. per Inch	18
Locknut	N 08
Lockwasher	W 08

Threads

Max. Major Diameter	39.70 mm 1.563 in

Min. Major Diameter	39.49 mm 1.5548 in
Max. Pitch Diameter	38.78 mm 1.5269 in
Min. Pitch Diameter	38.67 mm 1.5224 in
Minor Diameter	37.97 mm 1.4948 in

Shaft

Relief Diameter A	37.57 mm 1.4792 in
Diameter S-3	36.51 mm 1 7/16 in
W[1]	3.2 mm 1/8 in
L[2]	13.50 mm 0.5313 in
H[3]	2.4 mm 3/32 in
S[4]	7.4 mm 7.9 mm 0.290 in 5/16 in
M[5]	3.20 mm 1/8 in

Locknut

C_1	57.15 mm 2 1/4 in

D	11.40 mm 0.4480 in

Lockwasher

Q	1.50 mm 0.058 in
R	40.7 mm 1.603 in
B	62.70 mm 2 15/32 in

[1] Tolerance -0 to + 0.4 mm (-0 to +1/64 in)
[2] Tolerance -0 to + 0.4 mm (-0 to +1/64 in)
[3] Tolerance -0 to + 0.4 mm (-0 to +1/64 in)
[4] Tolerance -0 to + 0.4 mm (-0 to +1/64 in)
[5] Tolerance -0 to + 0.4 mm (-0 to +1/64 in)