The Timken Company
4500 Mt Pleasant St. NW
N. Canton, OH 44720
Phone: (234) 262-3000
E-Mail: CustomerCAD@timken.com • **Web site:** www.timken.com

Timken Part Number JM624649 - JM624610, Tapered Roller Bearings - TS (Tapered Single) Metric

This is the most basic and most widely used type of tapered roller bearing. It consists of two main separable parts: the cone (inner ring) assembly and the cup (outer ring). It is typically mounted in opposing pairs on a shaft.



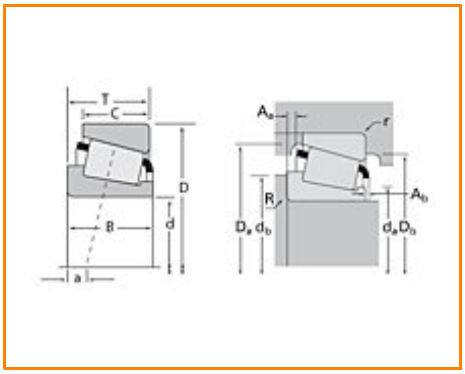

Specifications | Dimensions | Abutment and Fillet Dimensions | Basic Load Ratings | Factors

Specifications

Series	M624600
Cone Part Number	JM624649
Cup Part Number	JM624610
Design Units	METRIC
Bearing Weight	2.900 Kg 6.50 lb
Cage Type	Stamped Steel

Dimensions

d - Bore	120 mm 4.7244 in
D - Cup Outer Diameter	180 mm 7.0866 in
B - Cone Width	36 mm 1.4173 in
C - Cup Width	26.000 mm 1.0236 in
T - Bearing Width	36 mm 1.4173 in

Abutment and Fillet Dimensions

R - Cone Backface "To Clear" Radius[1]	3.560 mm 0.14 in
r - Cup Backface "To Clear" Radius[2]	1.52 mm 0.06 in
da - Cone Frontface Backing Diameter	128.02 mm 5.04 in
db - Cone Backface Backing Diameter	134.87 mm 5.31 in
Da - Cup Frontface Backing Diameter	173.00 mm 6.85 in
Db - Cup Backface Backing Diameter	166.12 mm 6.54 in
Ab - Cage-Cone Frontface Clearance	3.3 mm 0.13 in
Aa - Cage-Cone Backface Clearance	3.3 mm 0.13 in
a - Effective Center Location[3]	0 mm 0 in

Basic Load Ratings

C90 - Dynamic Radial Rating (90 million revolutions)[4]	64000 N 14400 lbf
C1 - Dynamic Radial Rating (1 million revolutions)[5]	247000 N 55500 lbf
C0 - Static Radial Rating	377000 N 84700 lbf
C_{a90} - Dynamic Thrust Rating (90 million revolutions)[6]	45300 N 10200 lbf

Factors

K - Factor[7]	1.41
e - ISO Factor[8]	0.41
Y - ISO Factor[9]	1.45
G1 - Heat Generation Factor (Roller-Raceway)	227
G2 - Heat Generation Factor (Rib-Roller End)	61.6
Cg - Geometry Factor	0.108

[1] These maximum fillet radii will be cleared by the bearing corners.

[2] These maximum fillet radii will be cleared by the bearing corners.

[3] Negative value indicates effective center inside cone backface.

[4] Based on 90 x 10^6 revolutions L_{10} life, for The Timken Company life calculation method. C_{90} and C_{a90} are radial and thrust values.

[5] Based on 1 x 10^6 revolutions L_{10} life, for the ISO life calculation method.

[6] Based on 90 x 10^6 revolutions L_{10} life, for The Timken Company life calculation method. C_{90} and C_{a90} are radial and thrust values for a single-row, $C_{90(2)}$ is the two-row radial value.

[7] These factors apply for both inch and metric calculations. Consult your Timken representative for instruction on use.

[8] These factors apply for both inch and metric calculations. Consult your Timken representative for instruction

on use.

[9] These factors apply for both inch and metric calculations. Consult your Timken representative for instruction on use.

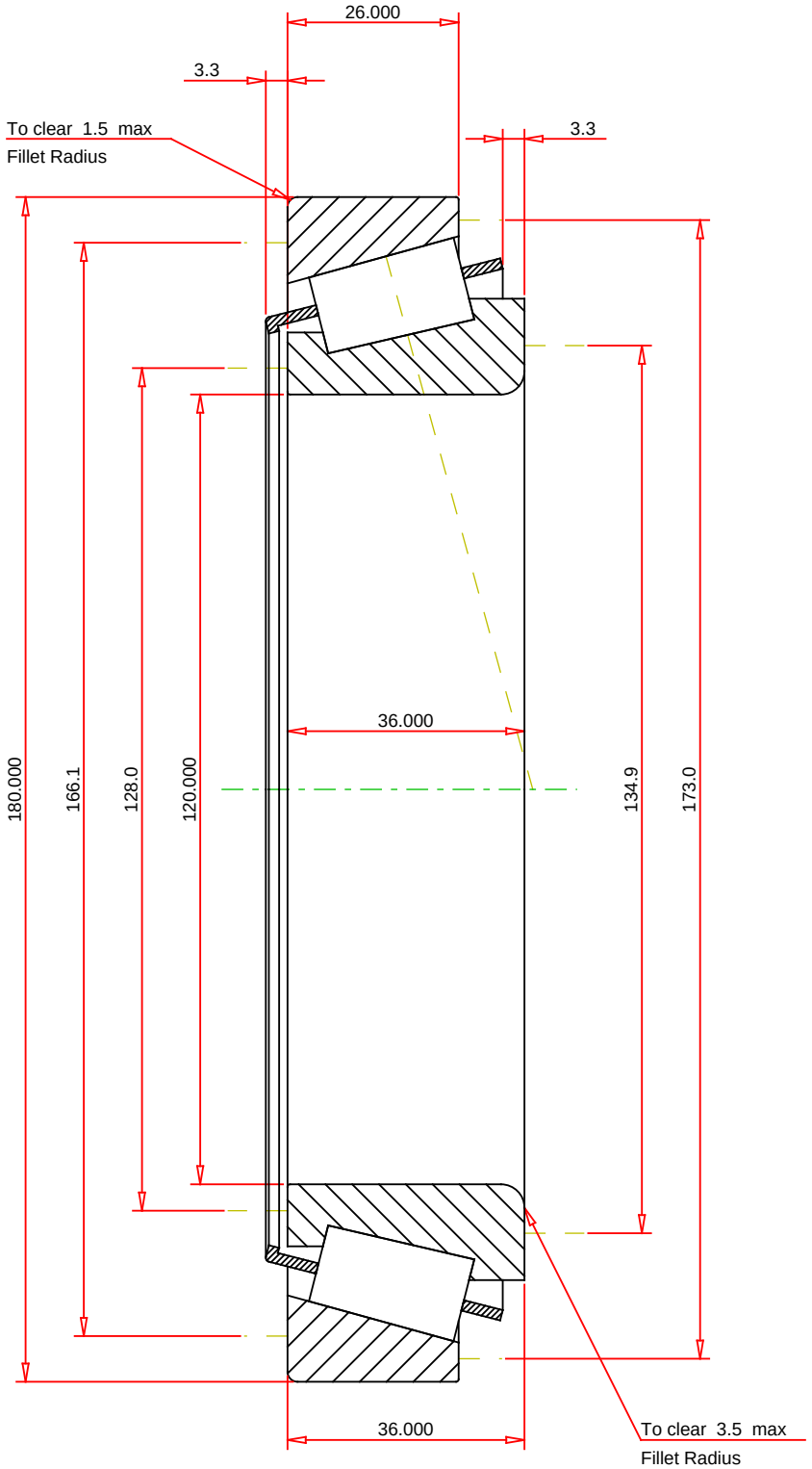

METRIC UNITS

ISO Factor - e	0.41	
ISO Factor - Y	1.45	
Bearing Weight	2.9	kg
Number of Rollers Per Row	26	
Effective Center Location	0	mm

TIMKEN®

THE TIMKEN COMPANY
NORTH CANTON, OHIO USA

JM624649 - JM624610
TS BEARING ASSEMBLY

K Factor	1.41	
Dynamic Radial Rating - C90	64000	N
Dynamic Thrust Rating - Ca90	45300	N
Static Radial Rating - C0	377000	N
Dynamic Radial Rating - C1	247000	N

Every reasonable effort has been made to ensure the accuracy of the information contained in this writing, but no liability is accepted for errors, omissions or for any other reason.

FOR DISCUSSION ONLY