The Timken Company
4500 Mt Pleasant St. NW
N. Canton, OH 44720
Phone: (234) 262-3000
E-Mail: CustomerCAD@timken.com • **Web site:** www.timken.com

Timken Part Number 455A - 453A, Tapered Roller Bearings - TS (Tapered Single) Imperial

This is the most basic and most widely used type of tapered roller bearing. It consists of two main separable parts: the cone (inner ring) assembly and the cup (outer ring). It is typically mounted in opposing pairs on a shaft.



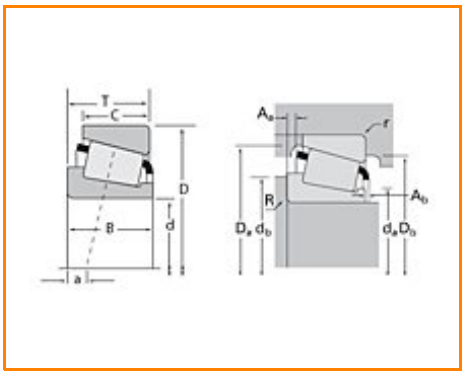

Specifications | Dimensions | Abutment and Fillet Dimensions | Basic Load Ratings | Factors

Specifications

Series	455
Cone Part Number	455A
Cup Part Number	453A
Design Units	Imperial
Bearing Weight	1.400 Kg 3.10 lb
Cage Type	Stamped Steel

Dimensions

d - Bore	38.1 mm 1.5 in

D - Cup Outer Diameter	107.95 mm 4.25 in
B - Cone Width	29.317 mm 1.1542 in
C - Cup Width	22.225 mm 0.8750 in
T - Bearing Width	27.783 mm 1.0938 in

Abutment and Fillet Dimensions

R - Cone Backface "To Clear" Radius[1]	3.560 mm 0.14 in
r - Cup Backface "To Clear" Radius[2]	0.76 mm 0.030 in
da - Cone Frontface Backing Diameter	49.53 mm 1.95 in
db - Cone Backface Backing Diameter	55.88 mm 2.20 in
Da - Cup Frontface Backing Diameter	100.10 mm 3.96 in
Db - Cup Backface Backing Diameter	97.03 mm 3.82 in
Ab - Cage-Cone Frontface Clearance	2 mm 0.08 in
Aa - Cage-Cone Backface Clearance	1.8 mm 0.07 in
a - Effective Center Location[3]	-7.10 mm -0.28 in

Basic Load Ratings

C90 - Dynamic Radial Rating (90 million revolutions)[4]	35200 N 7900 lbf
C1 - Dynamic Radial Rating (1 million revolutions)[5]	136000 N 30500 lbf
C0 - Static Radial Rating	166000 N 37200 lbf
C_{a90} - Dynamic Thrust Rating (90 million revolutions)[6]	20200 N 4540 lbf

Factors

K - Factor[7]	1.74
e - ISO Factor[8]	0.34
Y - ISO Factor[9]	1.79
G1 - Heat Generation Factor (Roller-Raceway)	58.6
G2 - Heat Generation Factor (Rib-Roller End)	17.1
Cg - Geometry Factor	0.0946

[1] These maximum fillet radii will be cleared by the bearing corners.
[2] These maximum fillet radii will be cleared by the bearing corners.
[3] Negative value indicates effective center inside cone backface.
[4] Based on 90 x 10^6 revolutions L_{10} life, for The Timken Company life calculation method. C_{90} and C_{a90} are radial and thrust values.
[5] Based on 1 x 10^6 revolutions L_{10} life, for the ISO life calculation method.
[6] Based on 90 x 10^6 revolutions L_{10} life, for The Timken Company life calculation method. C_{90} and C_{a90} are radial and thrust values for a single-row, $C_{90(2)}$ is the two-row radial value.
[7] These factors apply for both inch and metric calculations. Consult your Timken representative for instruction on use.
[8] These factors apply for both inch and metric calculations. Consult your Timken representative for instruction on use.
[9] These factors apply for both inch and metric calculations. Consult your Timken representative for instruction on use.

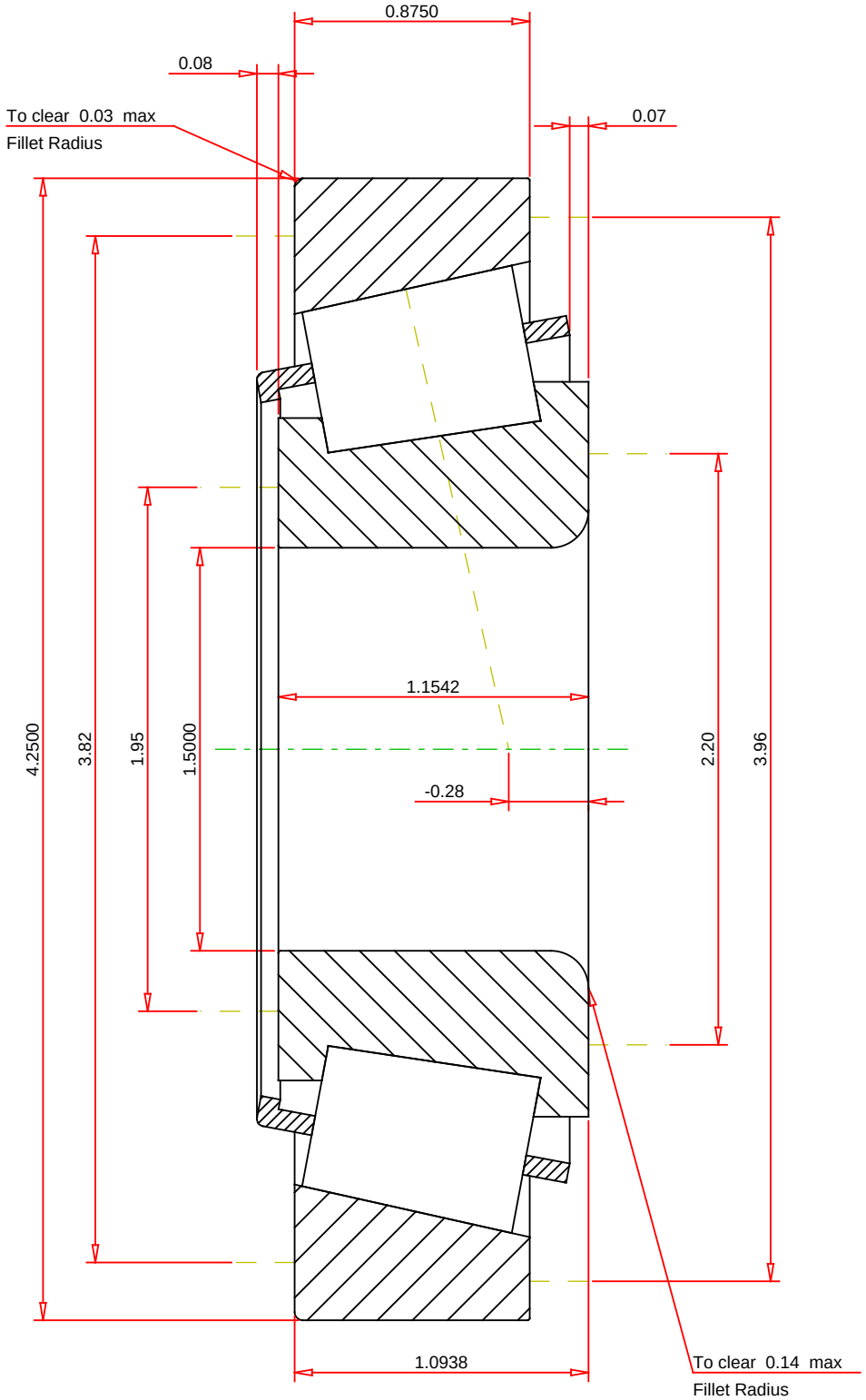

IMPERIAL UNITS

ISO Factor - e	0.34	
ISO Factor - Y	1.79	
Bearing Weight	3.1	lb
Number of Rollers Per Row	18	
Effective Center Location	-0.28	inch

TIMKEN®

THE TIMKEN COMPANY
NORTH CANTON, OHIO USA

455A - 453A
TS BEARING ASSEMBLY

K Factor	1.74	
Dynamic Radial Rating - C90	35200	lbf
Dynamic Thrust Rating - Ca90	20200	lbf
Static Radial Rating - C0	166000	lbf
Dynamic Radial Rating - C1	136000	lbf

Every reasonable effort has been made to ensure the accuracy of the information contained in this writing, but no liability is accepted for errors, omissions or for any other reason.

FOR DISCUSSION ONLY