The Timken Company
4500 Mt Pleasant St. NW
N. Canton, OH 44720
Phone: (234) 262-3000
E-Mail: CustomerCAD@timken.com • **Web site:** www.timken.com

Timken Part Number 14118AS - 14283, Tapered Roller Bearings - TS (Tapered Single) Imperial

This is the most basic and most widely used type of tapered roller bearing. It consists of two main separable parts: the cone (inner ring) assembly and the cup (outer ring). It is typically mounted in opposing pairs on a shaft.



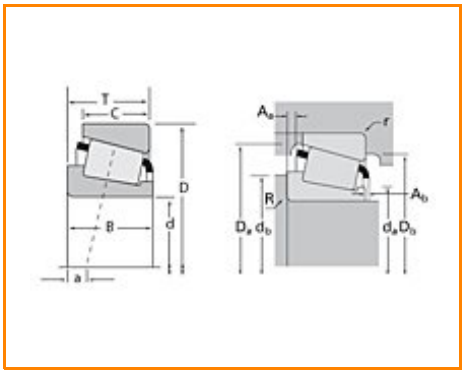

Specifications | Dimensions | Abutment and Fillet Dimensions | Basic Load Ratings | Factors

Specifications

Series	14000
Cone Part Number	14118AS
Cup Part Number	14283
Design Units	Imperial
Bearing Weight	0.400 Kg 1.00 lb
Cage Type	Stamped Steel

Dimensions

d - Bore	29.987 mm 1.1806 in
D - Cup Outer Diameter	72.085 mm 2.8380 in
B - Cone Width	19.202 mm 0.7560 in
C - Cup Width	18.415 mm 0.7250 in
T - Bearing Width	22.385 mm 0.8813 in

Abutment and Fillet Dimensions

R - Cone Backface "To Clear" Radius[1]	0.760 mm 0.03 in
r - Cup Backface "To Clear" Radius[2]	2.29 mm 0.090 in
da - Cone Frontface Backing Diameter	37.08 mm 1.46 in
db - Cone Backface Backing Diameter	37.59 mm 1.48 in
Da - Cup Frontface Backing Diameter	66.00 mm 2.60 in
Db - Cup Backface Backing Diameter	59.94 mm 2.36 in
Ab - Cage-Cone Frontface Clearance	2.3 mm 0.09 in
Aa - Cage-Cone Backface Clearance	0.5 mm 0.02 in
a - Effective Center Location[3]	-4.30 mm -0.17 in

Basic Load Ratings

C90 - Dynamic Radial Rating (90 million revolutions)[4]	16800 N 3770 lbf
C1 - Dynamic Radial Rating (1 million revolutions)[5]	64700 N 14500 lbf
C0 - Static Radial Rating	61700 N 13900 lbf
C_{a90} - Dynamic Thrust Rating (90 million revolutions)[6]	11000 N 2470 lbf

Factors

K - Factor[7]	1.53
e - ISO Factor[8]	0.38
Y - ISO Factor[9]	1.57
G1 - Heat Generation Factor (Roller-Raceway)	18
G2 - Heat Generation Factor (Rib-Roller End)	13.3
Cg - Geometry Factor	0.0668

[1] These maximum fillet radii will be cleared by the bearing corners.

[2] These maximum fillet radii will be cleared by the bearing corners.

[3] Negative value indicates effective center inside cone backface.

[4] Based on 90 x 10^6 revolutions L_{10} life, for The Timken Company life calculation method. C_{90} and C_{a90} are radial and thrust values.

[5] Based on 1 x 10^6 revolutions L_{10} life, for the ISO life calculation method.

[6] Based on 90 x 10^6 revolutions L_{10} life, for The Timken Company life calculation method. C_{90} and C_{a90} are radial and thrust values for a single-row, $C_{90(2)}$ is the two-row radial value.

[7] These factors apply for both inch and metric calculations. Consult your Timken representative for instruction on use.

[8] These factors apply for both inch and metric calculations. Consult your Timken representative for instruction

on use.

[9] These factors apply for both inch and metric calculations. Consult your Timken representative for instruction on use.

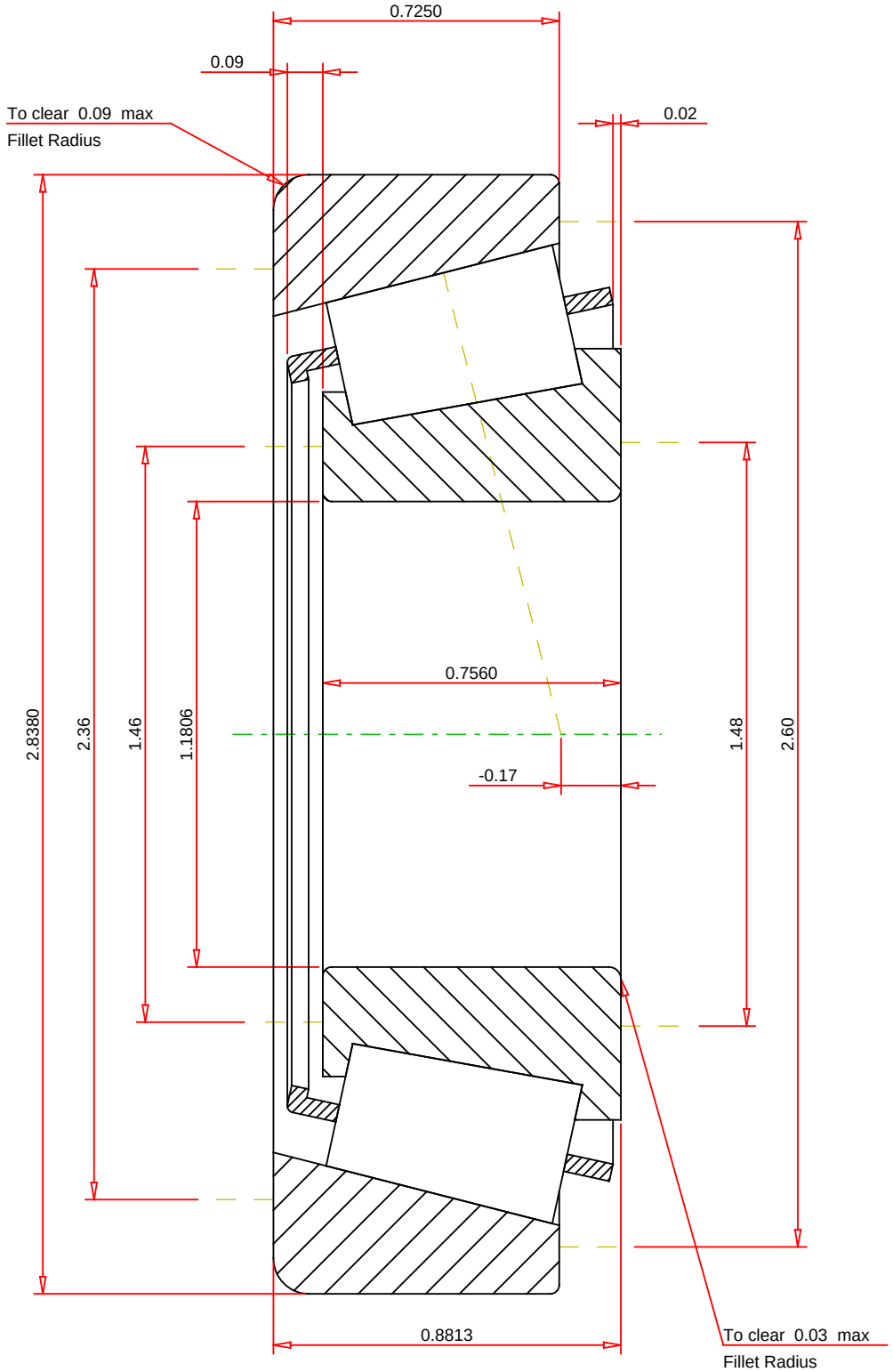

IMPERIAL UNITS

ISO Factor - e	0.38	
ISO Factor - Y	1.57	
Bearing Weight	1	lb
Number of Rollers Per Row	17	
Effective Center Location	-0.17	inch

TIMKEN®

THE TIMKEN COMPANY
NORTH CANTON, OHIO USA

14118AS - 14283
TS BEARING ASSEMBLY

K Factor	1.53	
Dynamic Radial Rating - C90	16800	lbf
Dynamic Thrust Rating - Ca90	11000	lbf
Static Radial Rating - C0	61700	lbf
Dynamic Radial Rating - C1	64700	lbf

Every reasonable effort has been made to ensure the accuracy of the information contained in this writing, but no liability is accepted for errors, omissions or for any other reason.

FOR DISCUSSION ONLY