The Timken Company
4500 Mt Pleasant St. NW
N. Canton, OH 44720
Phone: (234) 262-3000
E-Mail: CustomerCAD@timken.com • **Web site:** www.timken.com

Timken Part Number RAO 2 3/16, Pillow Block Units Eccentric Locking Collar (Includes Industrial and Standard Series)





Specifications | Dimensions | Basic Load Ratings

Specifications

Bore Size d	2 3/16 in 55.6 mm
Bearing Number	GN203KRRB
Inside Ring Outside Diameter	0.874 in 22.2 mm
Dimension B1	2.874 in 73 mm
Dimension T	1.563 in 39.7 mm
Series	Medium-Duty
Weight	17.505 lb 7.94 Kg
Seal Type	Shroud Seal

Dimensions

Shaft Height H	77.79 mm 3.063 in
Total Length L	287.3 mm 11.311 in
Total Width A	3.126 in 79.4 mm
Bolt Hole Spacing J	228.6 mm 9.000 in
Bolt Hole Width N	22.2 mm 0.874 in
Bolt Hole Length N1	28.6 mm 1.126 in
Base Height H1	36.5 mm 1.437 in
Total Height H2	153.2 mm 6.031 in
Dimension L1	95.8 mm 3.772 in
Inside Ring Width B	N/A
Center of Bearing from End S	27.8 mm 1.094 in

Basic Load Ratings

Static Load Rating	9300 lbf 41500 N
Dynamic Load Rating	18000 lbf 80000 N

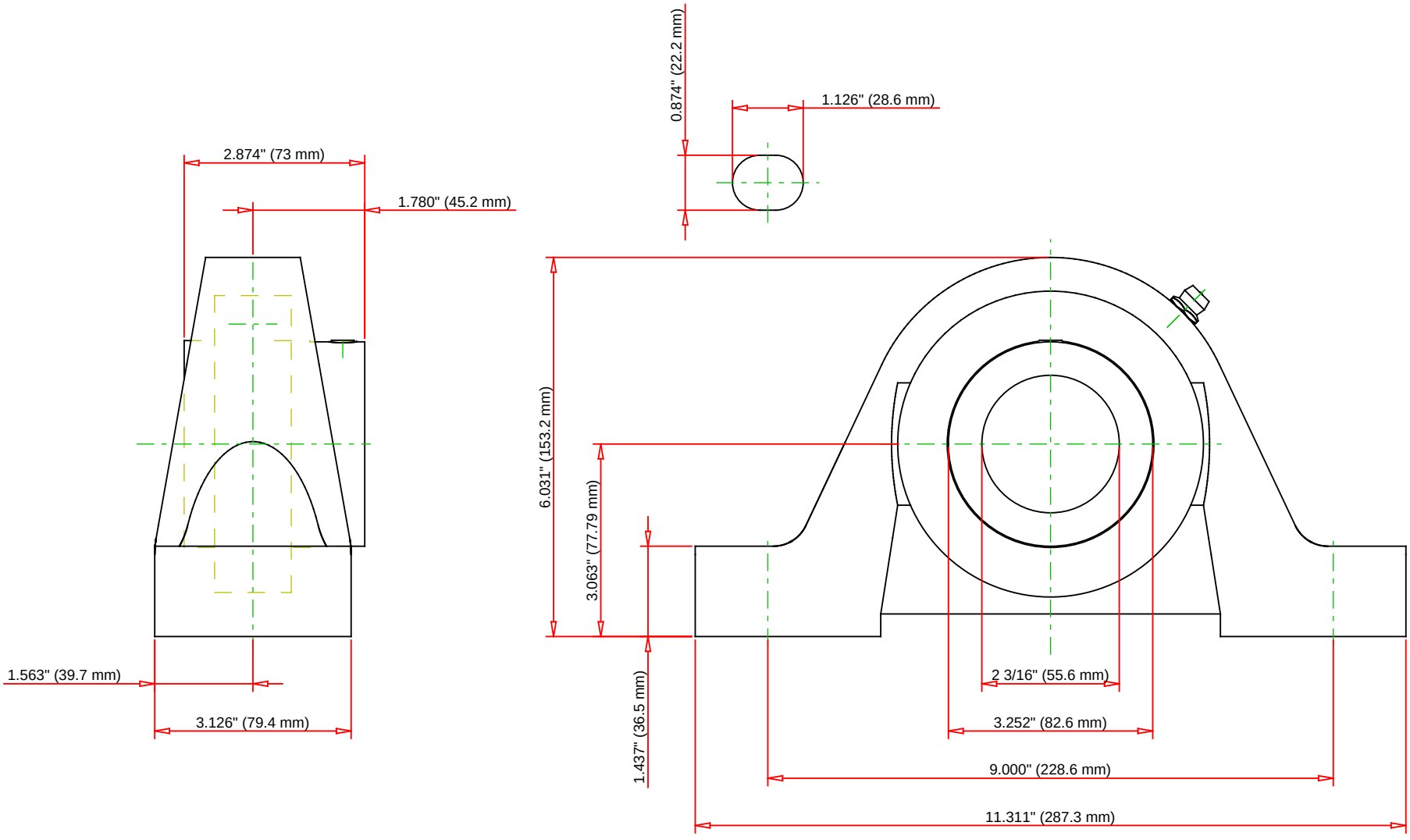

Bearing Number	GN203KRRB			
Load Ratings - C_r	18000	lbf	80000	N
Load Ratings - C_{0r}	9300	lbf	41500	N
Weight	17.505	lb	7.94	kg

TIMKEN

THE TIMKEN COMPANY
NORTH CANTON, OHIO USA

RAO 2 3/16

Pillow Block Units Eccentric Locking Collar
(Includes Industrial and Standard Series)

Every reasonable effort has been made to ensure the accuracy of the information contained in this writing, but no liability is accepted for errors, omissions or for any other reason.

FOR DISCUSSION ONLY