The Timken Company
4500 Mt Pleasant St. NW
N. Canton, OH 44720
Phone: (234) 262-3000
E-Mail: CustomerCAD@timken.com • **Web site:** www.timken.com

Timken Part Number GRA102RR, Fafnir® Eccentric Locking Collar Ball Bearings



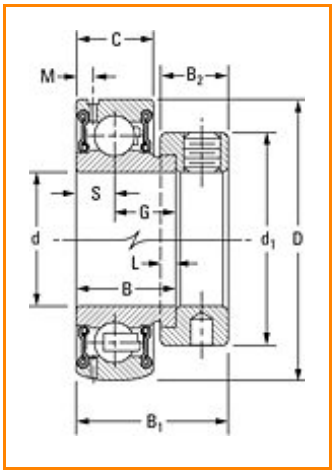

Specifications | Dimensions | Basic Load Ratings

Specifications

Bore Size d	1 1/8 in 28.6 mm
Bore Type	Cylindrical bore
Bearing Type	Ball Bearing
Seal Type	Molded Shroud
Material	Bearing Steel
Lubrication Type	Relubricatable
O.D. Type	Cylindrical OD
Dimension M	0.164 in 4.17 mm
Dimension B1	1.406 in 35.7 mm

Dimension B2	0.626 in 15.9 mm
Series	Standard
Weight	0.500 lb 0.200 Kg
Sub Series	GRA..RR

Dimensions

Outside Diameter D	2.441 in 62.000 mm
Inside Ring Width B	23.83 mm 0.938 in
Outside Ring Width C	18.000 mm 0.709 in
Radius r	0.6 mm 0.024 in
Center of Bearing from End S	8.99 mm 0.354 in
Dimension S1	26.71 mm 1.052 in
Set Screw Size	5/16-18
Number of Set Screws	2
Angle between Set Screws	90 º

Basic Load Ratings

Static Load Rating	2500 lbf 11100 N

Dynamic Load Rating	4900 lbf 21800 N

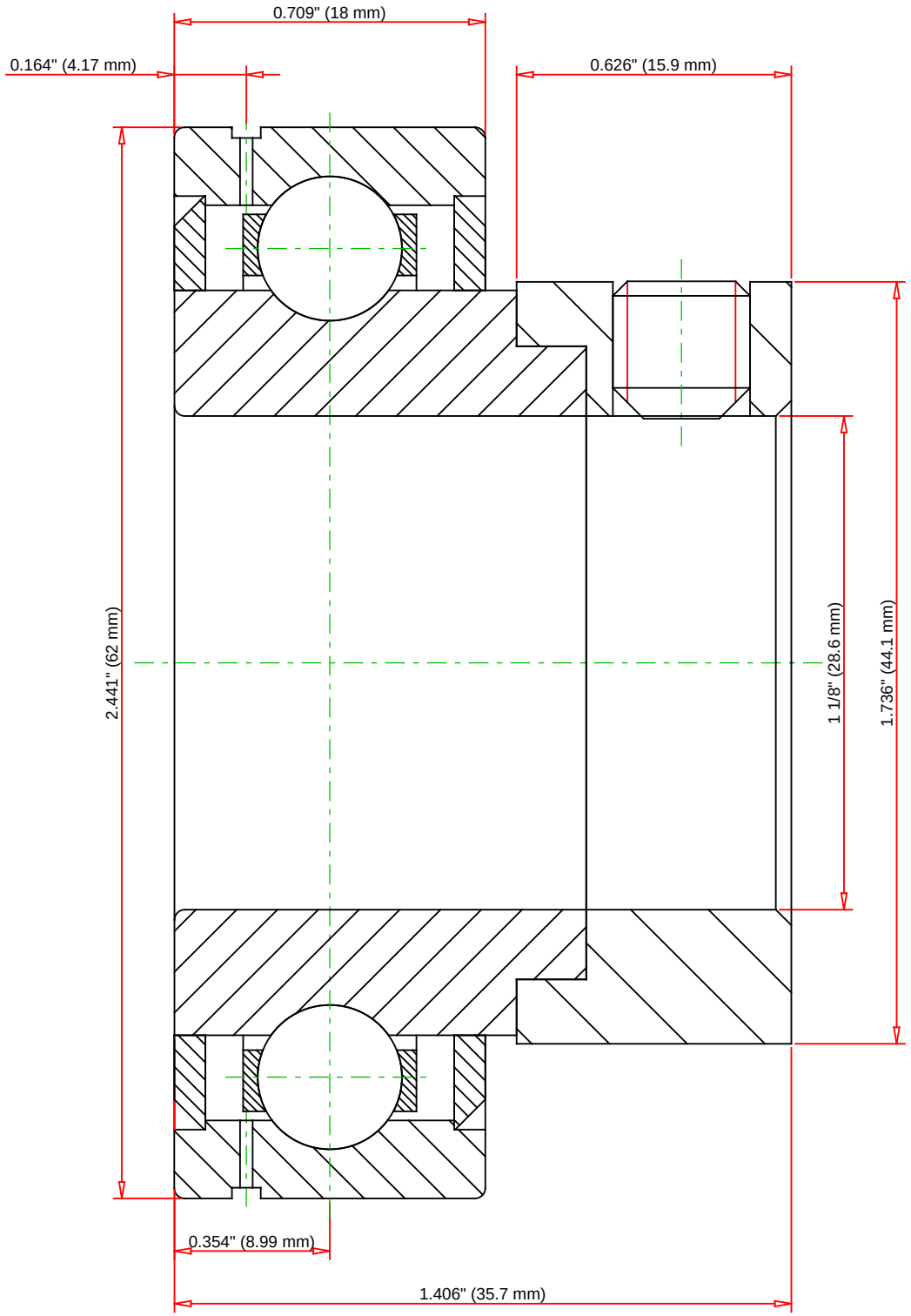

Weight	0.5 lb	0.2 kg

TIMKEN®

THE TIMKEN COMPANY
NORTH CANTON, OHIO USA

GRA102RR

Fafnir® Eccentric Locking Collar Ball Bearings

Basic Load Ratings - C_r	4900 lbf	21800 N
Load Ratings - C_{0r}	2500 lbf	11100 N

Every reasonable effort has been made to ensure the accuracy of the information contained in this writing, but no liability is accepted for errors, omissions or for any other reason.

FOR DISCUSSION ONLY