The Timken Company
4500 Mt Pleasant St. NW
N. Canton, OH 44720
Phone: (234) 262-3000
E-Mail: CustomerCAD@timken.com • **Web site:** www.timken.com

Timken Part Number GN115KLLB, Fafnir® Eccentric Locking Collar Ball Bearings



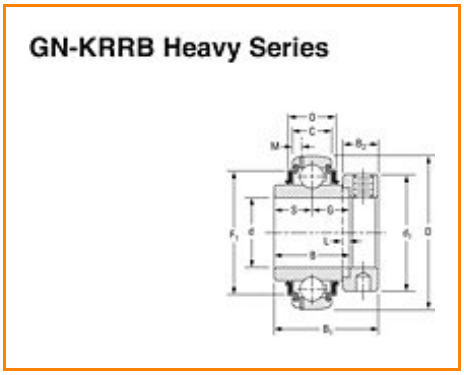

Specifications | Dimensions | Basic Load Ratings

Specifications

Bore Size d	1 15/16 in 49.2 mm
Bore Type	Cylindrical bore
Bearing Type	Ball Bearing
Seal Type	Labyrinth Seal
Material	Bearing Steel
Lubrication Type	Relubricatable
O.D. Type	Spherical OD
Dimension M	0.211 in 5.36 mm
Dimension B1	2.626 in 66.7 mm

Dimension B2	0.874 in 22.2 mm
Series	Medium-Duty
Weight	0.500 lb 0.200 Kg
Sub Series	GN..KLLB

Dimensions

Outside Diameter D	4.331 in 110.000 mm
Inside Ring Width B	49.21 mm 1.937 in
Outside Ring Width C	29.000 mm 1.142 in
Radius r	0.6 mm 0.024 in
Center of Bearing from End S	24.6 mm 0.969 in
Dimension S1	42.1 mm 1.657 in
Set Screw Size	3/8-16
Number of Set Screws	2
Angle between Set Screws	90 º

Basic Load Ratings

Static Load Rating	8000 lbf 35500 N

Dynamic Load Rating	15300 lbf 68000 N

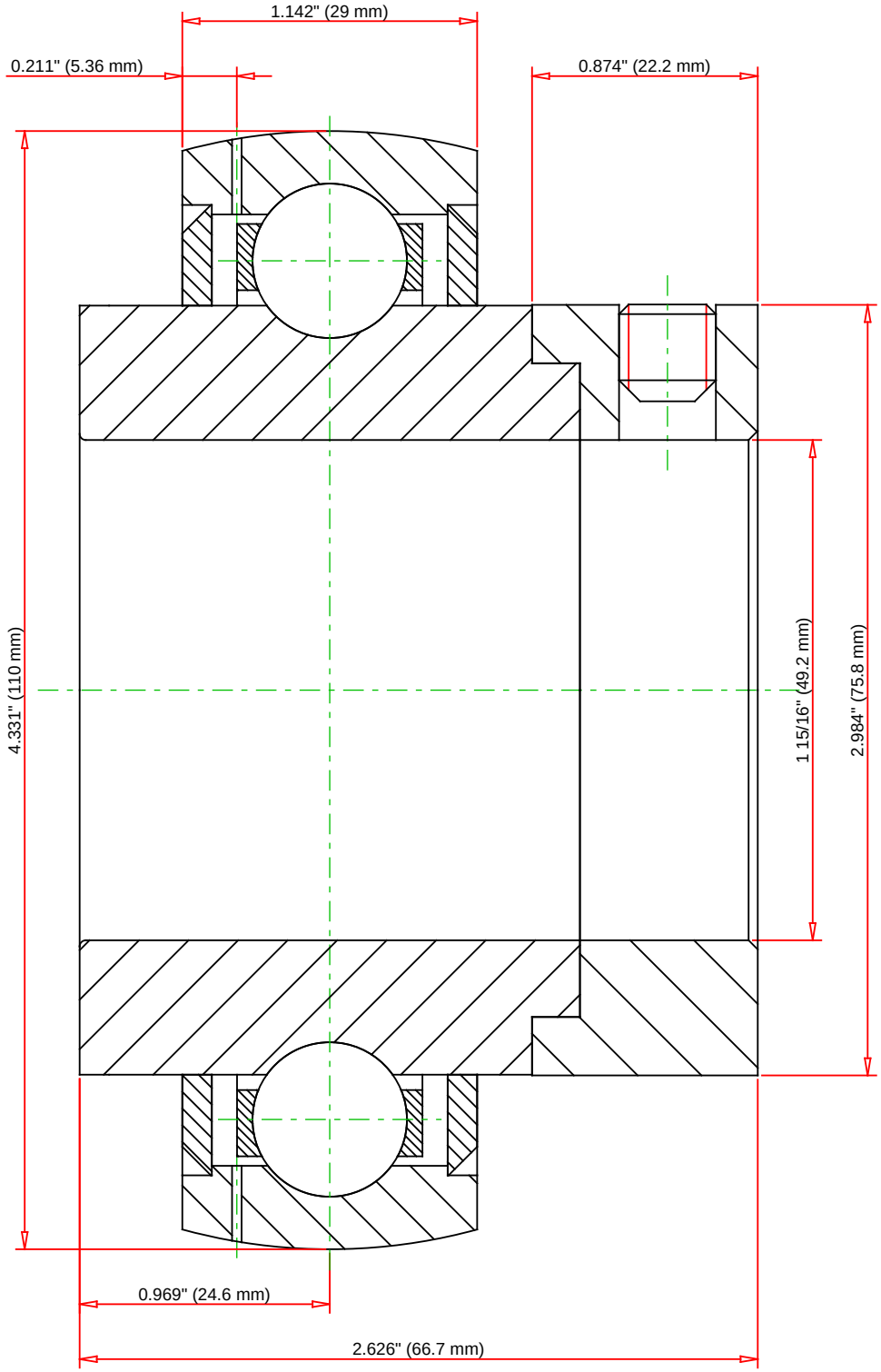

Weight	0.5 lb	0.2 kg

TIMKEN®

THE TIMKEN COMPANY
NORTH CANTON, OHIO USA

GN115KLLB

Fafnir® Eccentric Locking Collar Ball Bearings

Basic Load Ratings - C_r	15300 lbf	68000 N
Load Ratings - C_{0r}	8000 lbf	35500 N

Every reasonable effort has been made to ensure the accuracy of the information contained in this writing, but no liability is accepted for errors, omissions or for any other reason.

FOR DISCUSSION ONLY