The Timken Company
4500 Mt Pleasant St. NW
N. Canton, OH 44720
Phone: (234) 262-3000
E-Mail: CustomerCAD@timken.com • **Web site:** www.timken.com

Timken Part Number YCJ 50 SGT, Four-Bolt Flanged Units Setscrew Locking (Includes Industrial and Standard Series)



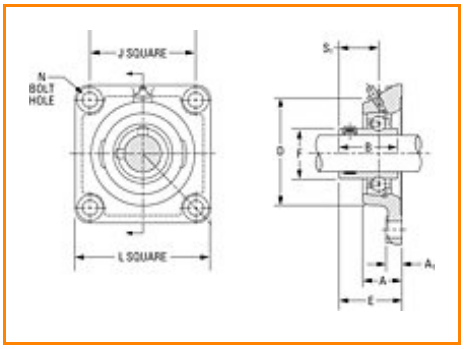

Specifications | Dimensions | Basic Load Ratings

Specifications

Bore Size d	1.969 in 50 mm
Bearing Number	GYE50KRRB SGT
Dimension D	4.437 in 112.7 mm
Dimension E	2.390 in 60.7 mm
Inside Ring Outside Diameter	2.474 in 62.84 mm
Series	Industrial
Weight	6.65 lb 3.02 Kg

Seal Type	Shroud Seal

Dimensions

Total Length L	142.9 mm 5.626 in
Total Width A	1.689 in 42.9 mm
Bolt Hole Size N	16 mm 0.630 in
Flange Thickness A1	14.3 mm 0.563 in
Center of Bearing from Housing End A2	28.2 mm 1.110 in
Inside Ring Width B	N/A
Total Height	142.9 mm 5.626 in
Bolt Size	M16
Center of Bearing from Bearing End S	19.1 mm 0.752 in

Basic Load Ratings

Static Load Rating	5100 lbf 22700 N
Dynamic Load Rating	8800 lbf 39000 N

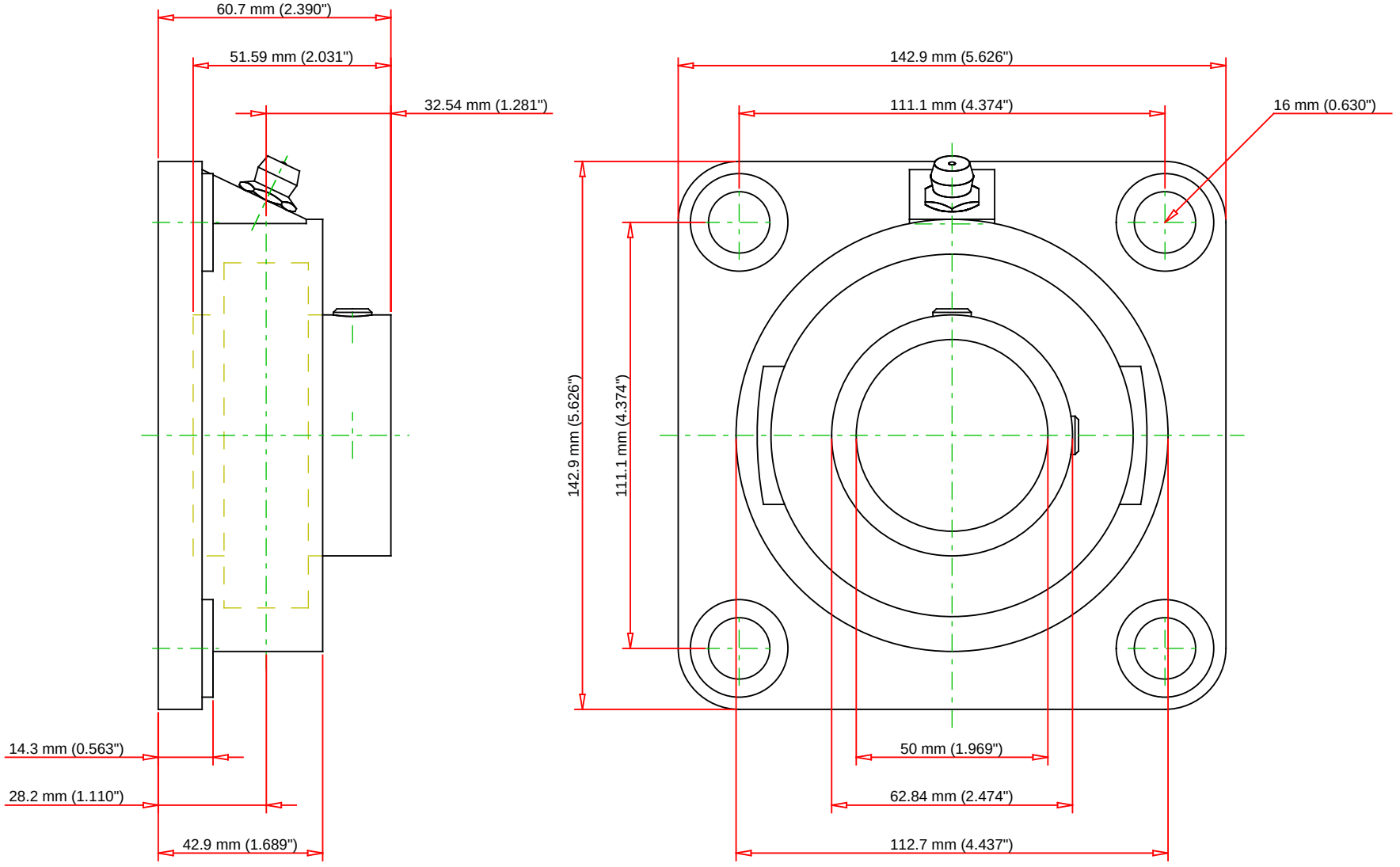

Bearing Number	GYE50KRRB SGT			
Load Ratings - C_r	8800	lbf	39000	N
Load Ratings - C_{0r}	5100	lbf	22700	N
Weight	0	lb	0	kg
Bolt Size	M10x1.5			

TIMKEN

THE TIMKEN COMPANY
NORTH CANTON, OHIO USA

YCJ 50 SGT

Four-Bolt Flanged Units Setscrew Locking
(Includes Industrial and Standard Series)

Every reasonable effort has been made to ensure the accuracy of the information contained in this writing, but no liability is accepted for errors, omissions or for any other reason.

FOR DISCUSSION ONLY