The Timken Company
4500 Mt Pleasant St. NW
N. Canton, OH 44720
Phone: (234) 262-3000
E-Mail: CustomerCAD@timken.com • **Web site:** www.timken.com

Timken Part Number 29430EJ, Thrust Spherical Roller Bearings

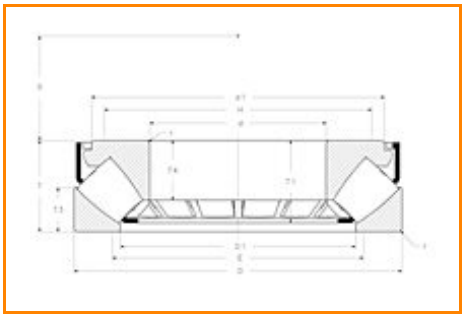

Specifications | Dimensions | Basic Load Ratings

Specifications

UPC Code	87796224650
Weight	27.0 Kg 59.5 lb

Dimensions

d - Bore	150.00 mm 5.906 in
D - Outside Diameter	300.000 mm 11.811 in
d1 - Cone Outside Diameter	262.90 mm 10.350 in
D1 - Cup Bore	207.50 mm 8.169 in
E - Shoulder Diameter - Housing (Max)	222.00 mm 8.740 in

H - Shoulder Diameter - Shaft (Min)	238.00 mm 9.370 in
r - Fillet Radius	3.00 mm 0.120 in
S - Dimension	92.00 mm 3.622 in
T - Total Width	90.00 mm 3.543 in
T1 - Cage Position	78.30 mm 3.080 in
T3 - Cup Width	43.40 mm 1.709 in
T4 - Cone Width	58.00 mm 2.284 in

Basic Load Ratings

Static Load Rating	4730 kN 1060000 lbf
Dynamic Load Rating	1860 kN 418000 lbf
Thermal Speed Rating	1200 rpm

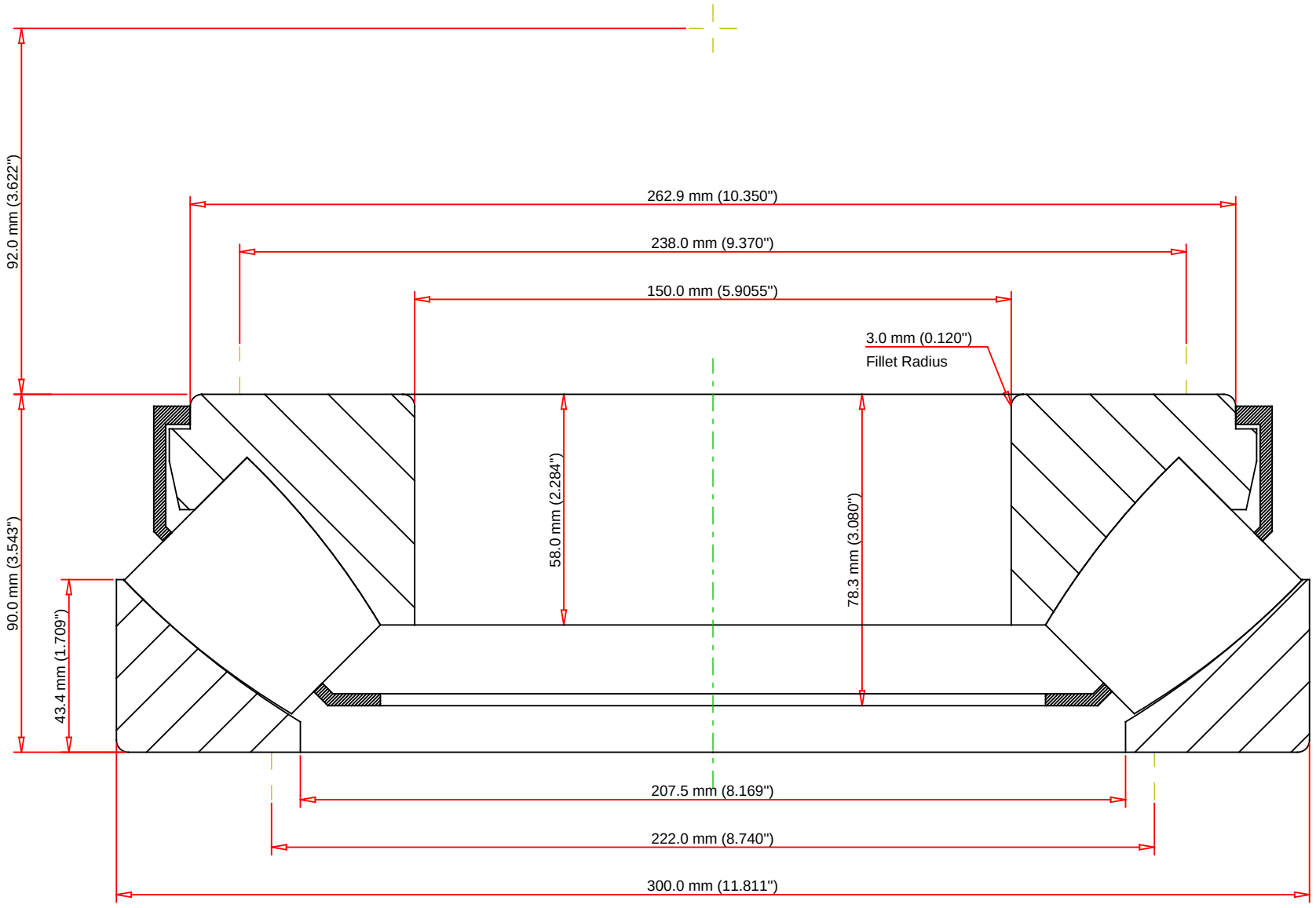

METRIC UNITS

Static Load Rating - C_{oa}	1060000	lbf	4730	kN
Dynamic Load Rating - C_a	418000	lbf	1860	kN
Weight	59.5	lb	27	kg

TIMKEN

THE TIMKEN COMPANY
NORTH CANTON, OHIO USA

29430EJ

Thrust Spherical Roller Bearings

Every reasonable effort has been made to ensure the accuracy of the information contained in this writing, but no liability is accepted for errors, omissions or for any other reason.

FOR DISCUSSION ONLY