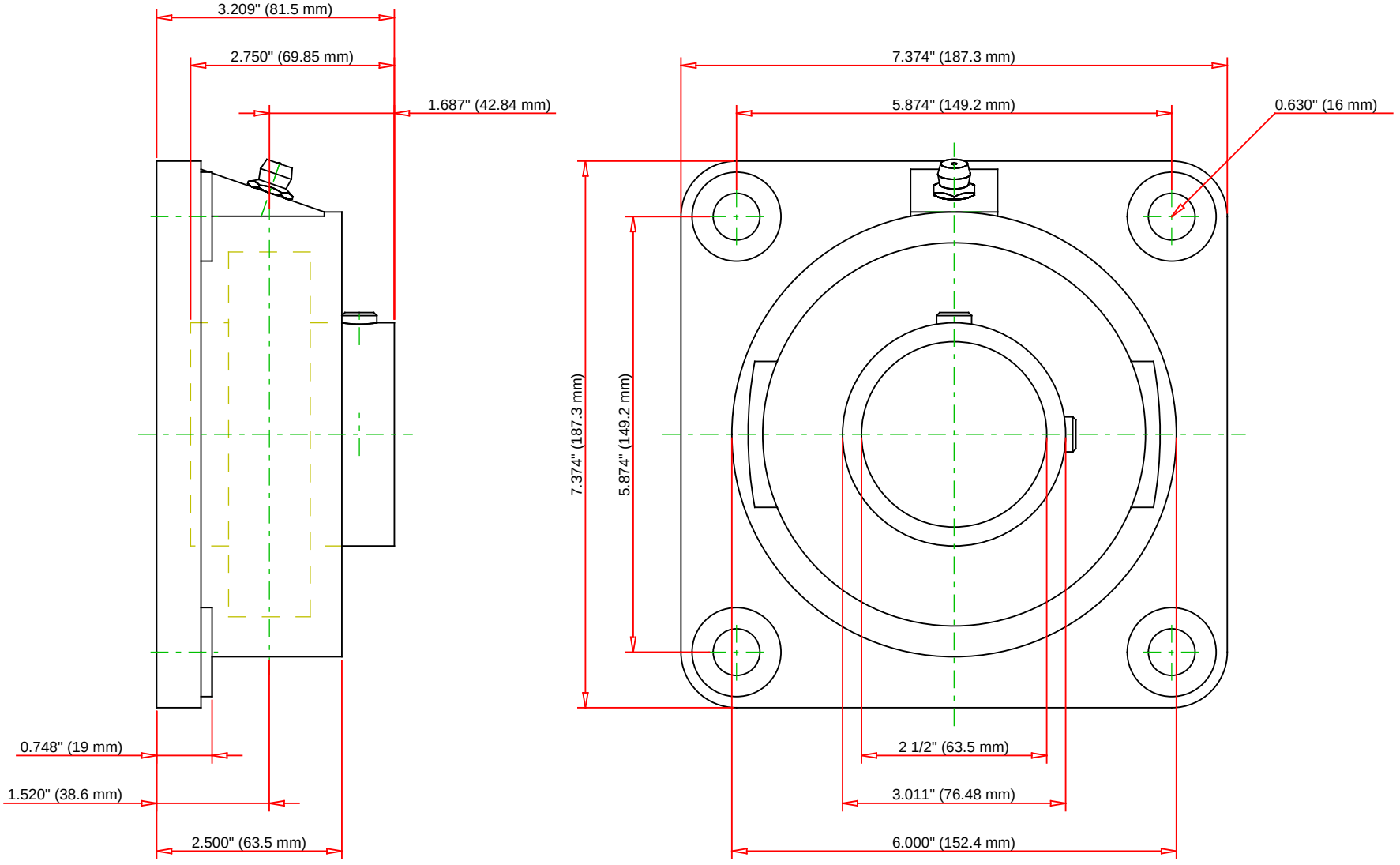

Bearing Number	GYM1208KRRB			
Load Ratings - C_r	15600	lbf	69500	N
Load Ratings - C_{0r}	9650	lbf	43000	N
Weight	0	lb	0	kg
Bolt Size	M12x1.75			

TIMKEN

THE TIMKEN COMPANY
NORTH CANTON, OHIO USA

YCJM2 1/2

Fafnir® Four-Bolt Flanged Units Setscrew Locking

Every reasonable effort has been made to ensure the accuracy of the information contained in this writing, but no liability is accepted for errors, omissions or for any other reason.

FOR DISCUSSION ONLY