The Timken Company
4500 Mt Pleasant St. NW
N. Canton, OH 44720
Phone: (234) 262-3000
E-Mail: CustomerCAD@timken.com • **Web site:** www.timken.com

Part Number YCJM2 1/2, Fafnir® Four-Bolt Flanged Units Setscrew Locking



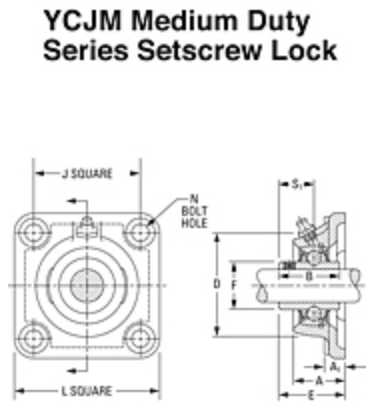

Specifications | Dimensions | Basic Load Ratings

Specifications

Shaft Size d	2 1/2 in 63.5 mm
Bearing Number	GYM1208KRRB
Dimension D	6.0 in 152.4 mm
Dimension E	3.209 in 81.5 mm
Inside Ring Outside Diameter	3.422 in 86.92 mm
Series	Medium-Duty
Weight	15.04 lb 6.82 Kg
Seal Type	Shroud Seal

Housing Construction	Four-Bolt Square Flange
Alternate Part Name	YCJM21/2

Dimensions

Total Length L	187.3 mm 7.374 in
Housing Width A	2.500 in 63.5 mm
Bolt Hole Size N	16 mm 0.630 in
Flange Thickness A1	19.00 mm 0.748 in
Center of Bearing from Housing End A2	38.6 mm 1.520 in
Inside Ring Width B	N/A
Total Height	187.3 mm 7.374 in
Bolt Size	M16
Center of Bearing from Bearing End S	27 mm 1.063 in

Basic Load Ratings

Static Load Rating	9890 lbf 44000 N
Dynamic Load Rating	15500 lbf 69000 N

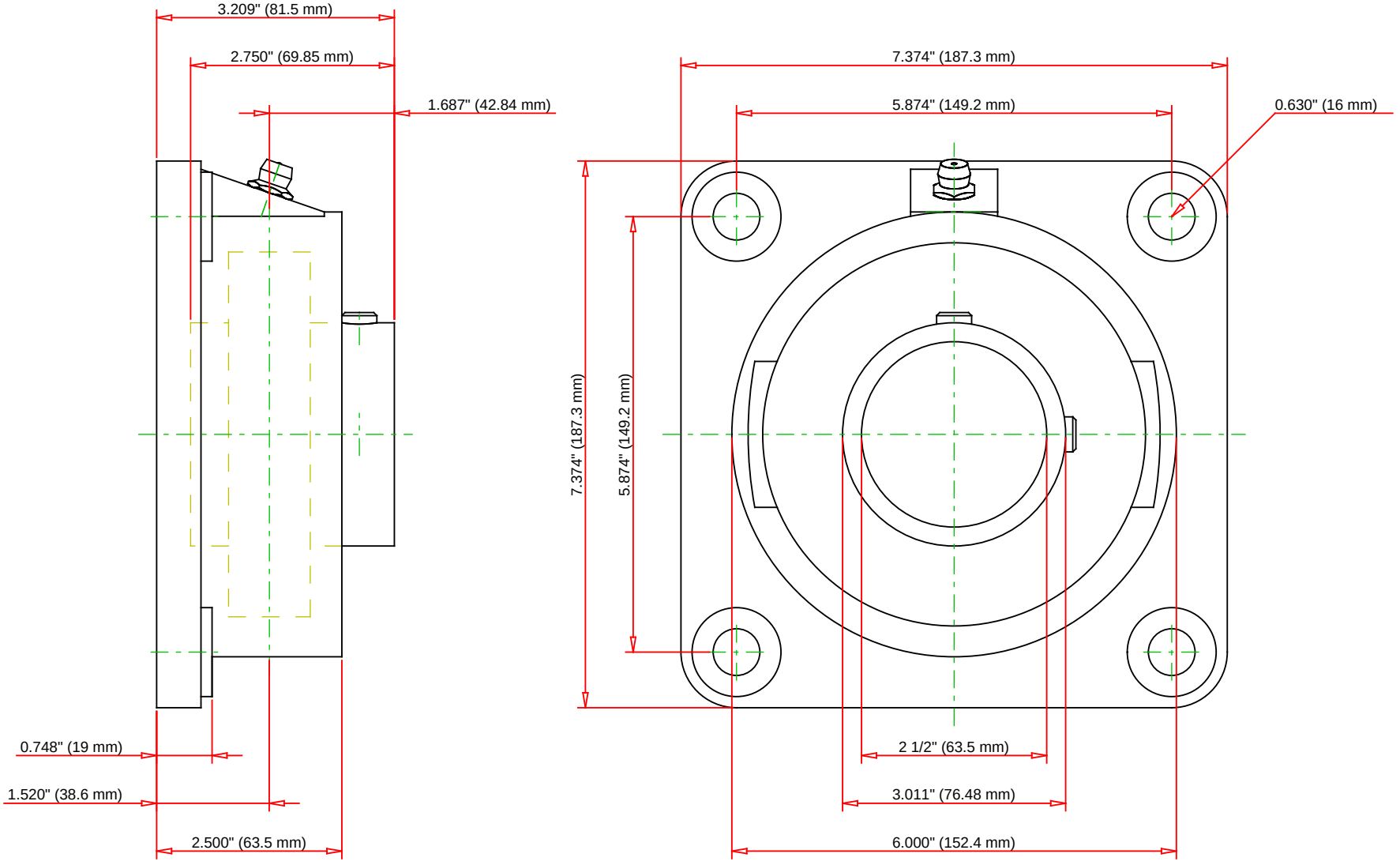

Bearing Number	GYM1208KRRB			
Load Ratings - C_r	15600	lbf	69500	N
Load Ratings - C_{0r}	9650	lbf	43000	N
Weight	0	lb	0	kg
Bolt Size	M12x1.75			

TIMKEN

THE TIMKEN COMPANY
NORTH CANTON, OHIO USA

YCJM2 1/2

Fafnir® Four-Bolt Flanged Units Setscrew Locking

Every reasonable effort has been made to ensure the accuracy of the information contained in this writing, but no liability is accepted for errors, omissions or for any other reason.

FOR DISCUSSION ONLY