The Timken Company
4500 Mt Pleasant St. NW
N. Canton, OH 44720
Phone: (234) 262-3000
E-Mail: CustomerCAD@timken.com • **Web site:** www.timken.com

Part Number 62306-2RS, Wide Section Ball Bearings (62000, 63000)

Timken's deep groove ball bearings deliver reliable performance in a wide range of applications and conditions. With super-finished raceways and controlled geometries, our premium design helps ensure consistent quality.



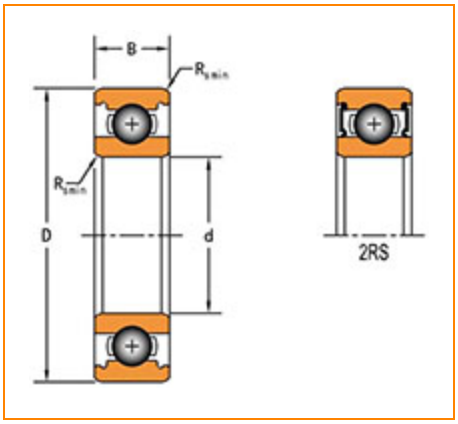

Specifications | Dimensions | Basic Load Ratings | Factors

Specifications

Clearance	C0 (Normal)
Bore Size d	30 mm
Features	Contact Seals
Weight	0.470 Kg
Grease Reference Speed	13000 rpm

Dimensions

Outside Diameter D	72.000 mm
Outside Ring Width B	27.000 mm

Radius Rs min	1.100 mm

Basic Load Ratings

Cr - Dynamic Load Rating	28.1 kN
C0r - Static Load Rating	16.00 kN

Factors

Grease Limiting Speed	13000 rpm

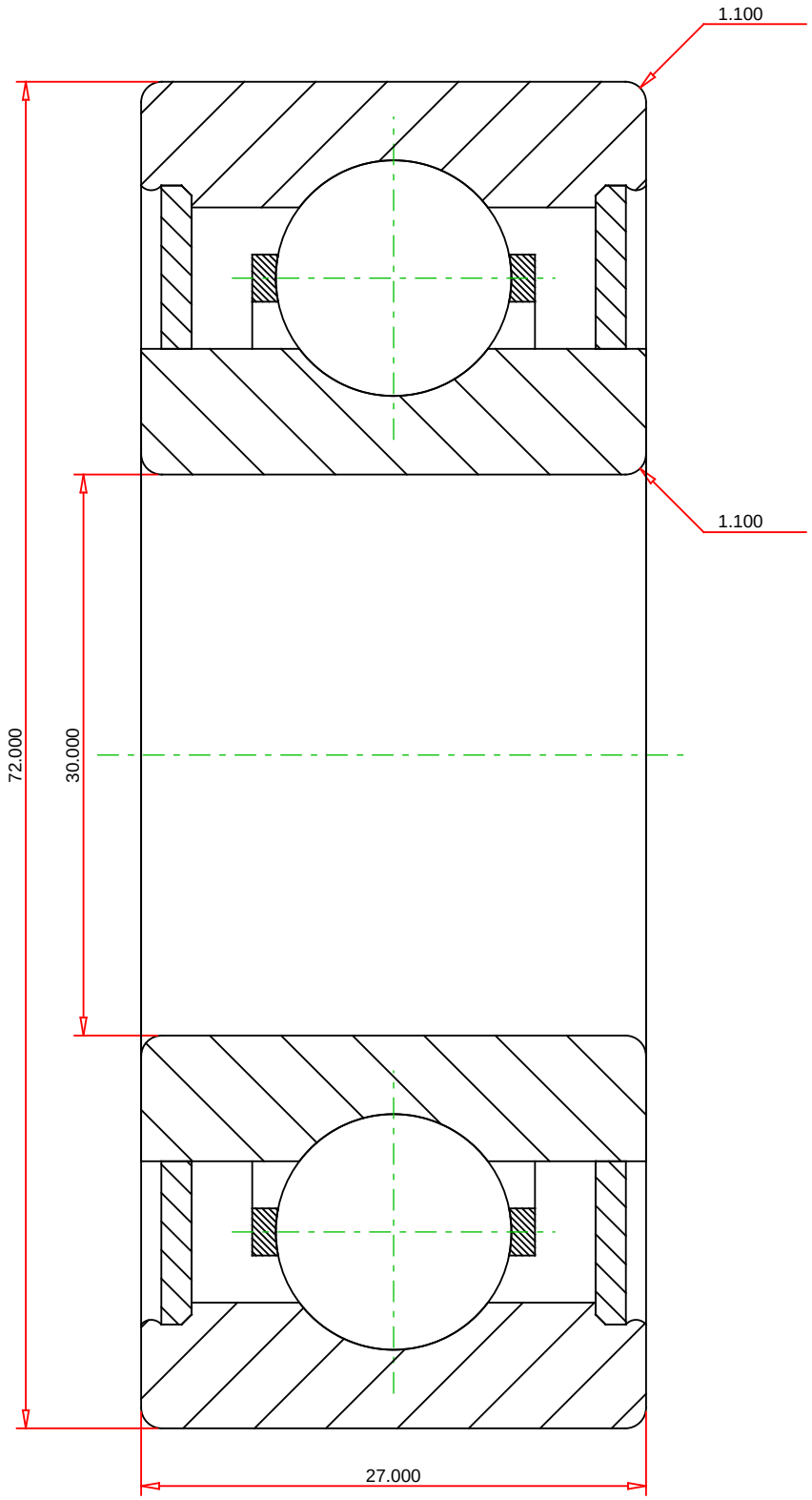

METRIC UNITS

Weight	0.47	kg

TIMKEN

THE TIMKEN COMPANY
NORTH CANTON, OHIO USA

62306-2RS

Wide Section Ball Bearings (62000, 63000)

Dynamic Load Rating	28200	N
Static Load Rating	15800	N

Every reasonable effort has been made to ensure the accuracy of the information contained in this writing, but no liability is accepted for errors, omissions or for any other reason.

FOR DISCUSSION ONLY