The Timken Company
4500 Mt Pleasant St. NW
N. Canton, OH 44720
Phone: (234) 262-3000
E-Mail: CustomerCAD@timken.com • **Web site:** www.timken.com

Timken Part Number LM48548 - LM48510, Tapered Roller Bearings - TS (Tapered Single) Imperial

This is the most basic and most widely used type of tapered roller bearing. It consists of two main separable parts: the cone (inner ring) assembly and the cup (outer ring). It is typically mounted in opposing pairs on a shaft.



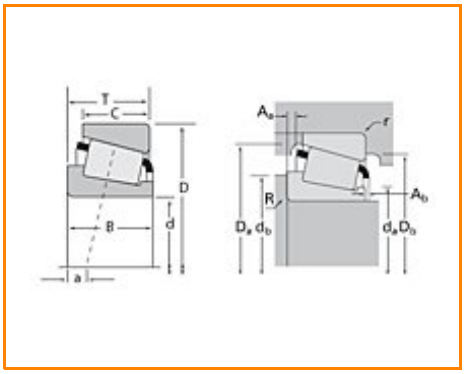

Specifications | Dimensions | Abutment and Fillet Dimensions | Basic Load Ratings | Factors

Specifications

Series	LM48500
Cone Part Number	LM48548
Cup Part Number	LM48510
Design Units	Imperial
Bearing Weight	0.200 Kg 0.50 lb
Cage Type	Stamped Steel

Dimensions

d - Bore	34.925 mm 1.3750 in
D - Cup Outer Diameter	65.088 mm 2.5625 in
B - Cone Width	18.288 mm 0.7200 in
C - Cup Width	13.970 mm 0.5500 in
T - Bearing Width	18.034 mm 0.7100 in

Abutment and Fillet Dimensions

R - Cone Backface "To Clear" Radius[1]	3.560 mm 0.14 in
r - Cup Backface "To Clear" Radius[2]	1.27 mm 0.050 in
da - Cone Frontface Backing Diameter	41.40 mm 1.63 in
db - Cone Backface Backing Diameter	48.01 mm 1.89 in
Da - Cup Frontface Backing Diameter	61.00 mm 2.44 in
Db - Cup Backface Backing Diameter	57.91 mm 2.28 in
Ab - Cage-Cone Frontface Clearance	2 mm 0.08 in
Aa - Cage-Cone Backface Clearance	0.3 mm 0.01 in
a - Effective Center Location[3]	-3.6 mm -0.14 in

Basic Load Ratings

C90 - Dynamic Radial Rating (90 million revolutions)[4]	16700 N 3760 lbf
C1 - Dynamic Radial Rating (1 million revolutions)[5]	64600 N 14500 lbf
C0 - Static Radial Rating	63100 N 14200 lbf
C_{a90} - Dynamic Thrust Rating (90 million revolutions)[6]	10800 N 2430 lbf

Factors

K - Factor[7]	1.55
e - ISO Factor[8]	0.38
Y - ISO Factor[9]	1.59
G1 - Heat Generation Factor (Roller-Raceway)	18
G2 - Heat Generation Factor (Rib-Roller End)	10.6
Cg - Geometry Factor	0.0666

[1] These maximum fillet radii will be cleared by the bearing corners.

[2] These maximum fillet radii will be cleared by the bearing corners.

[3] Negative value indicates effective center inside cone backface.

[4] Based on 90 x 10^6 revolutions L_{10} life, for The Timken Company life calculation method. C_{90} and C_{a90} are radial and thrust values.

[5] Based on 1 x 10^6 revolutions L_{10} life, for the ISO life calculation method.

[6] Based on 90 x 10^6 revolutions L_{10} life, for The Timken Company life calculation method. C_{90} and C_{a90} are radial and thrust values for a single-row, $C_{90(2)}$ is the two-row radial value.

[7] These factors apply for both inch and metric calculations. Consult your Timken representative for instruction on use.

[8] These factors apply for both inch and metric calculations. Consult your Timken representative for instruction

on use.

[9] These factors apply for both inch and metric calculations. Consult your Timken representative for instruction on use.

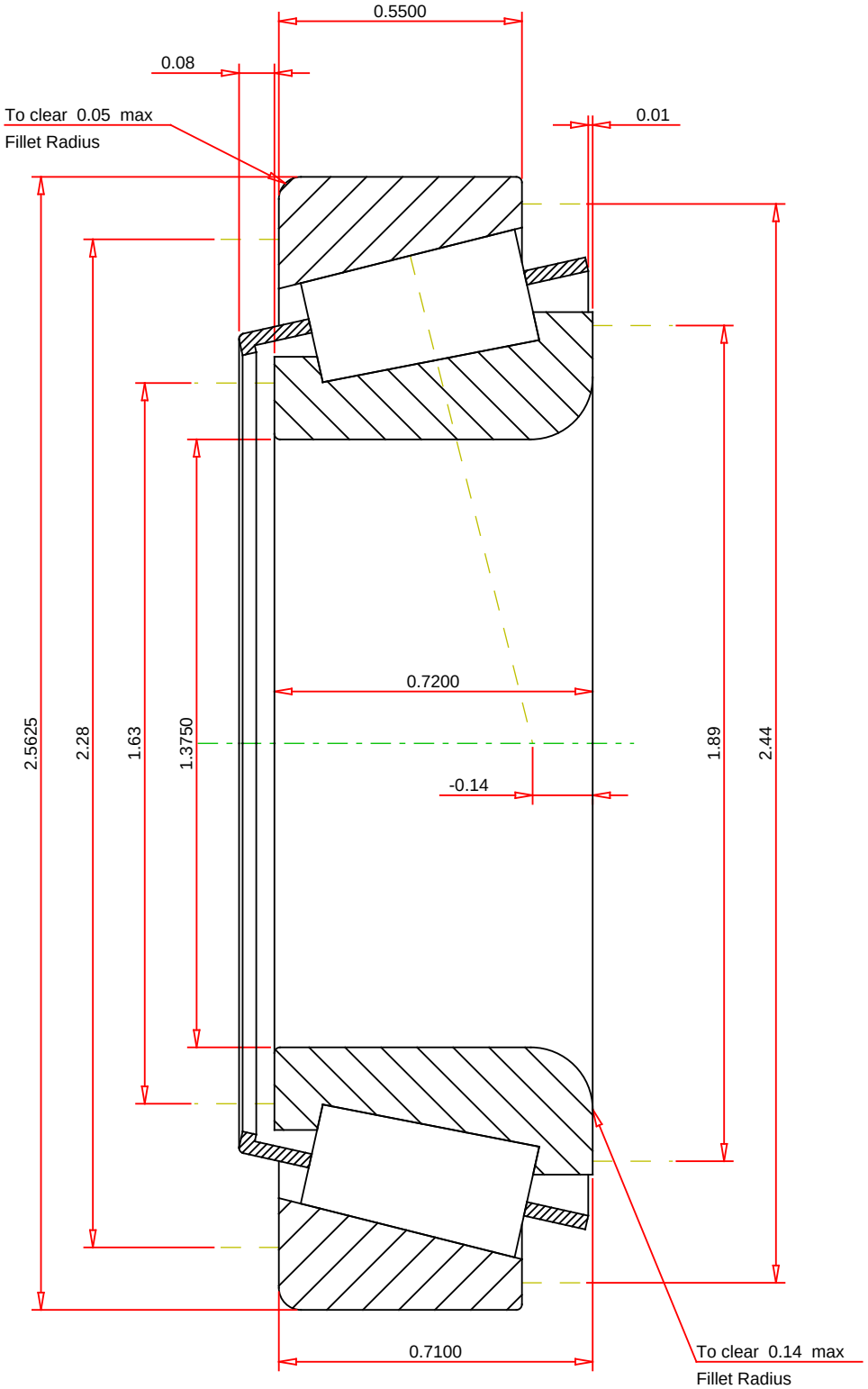

IMPERIAL UNITS

ISO Factor - e	0.38	
ISO Factor - Y	1.59	
Bearing Weight	0.5	lb
Number of Rollers Per Row	19	
Effective Center Location	-0.14	inch

TIMKEN

THE TIMKEN COMPANY
NORTH CANTON, OHIO USA

LM48548 - LM48510
TS BEARING ASSEMBLY

K Factor	1.55	
Dynamic Radial Rating - C90	16700	lbf
Dynamic Thrust Rating - Ca90	10800	lbf
Static Radial Rating - C0	63100	lbf
Dynamic Radial Rating - C1	64600	lbf

Every reasonable effort has been made to ensure the accuracy of the information contained in this writing, but no liability is accepted for errors, omissions or for any other reason.

FOR DISCUSSION ONLY