The Timken Company
4500 Mt Pleasant St. NW
N. Canton, OH 44720
Phone: (234) 262-3000
E-Mail: CustomerCAD@timken.com • **Web site:** www.timken.com

Timken Part Number SDAF 22230, Inch Straight Bore Mounting Pillow Block SDAF222 and SDAF223 Series

- Each assembly includes the housing cap and base, cap bolts, bearing, locknut and washer, stabilizing ring, and triple ring seals.
- To order pillow block housing only, use the numbers listed in the "Housing Only" column. These units include: cap, base, cap bolts, triple ring seals and stabilizing ring.
- Assembly and pillow blocks described on this page constitute fixed units.
- To order float units, specify part number plus suffix "Float" or "FL".
- If one end closed assembly is required, specify “CL”

more

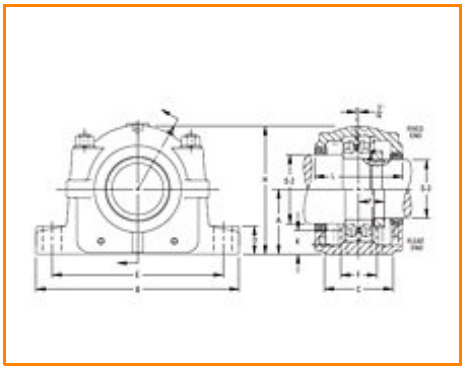

Specifications

Bearing Number	22230
Diameter S-2	6 5/8 in
Diameter S-3	5 3/4 in
A	6.3125 in
B	21.2500 in
C	7.8750 in
D	2.50 in

E Max.	18.2500 in
E Min.	17.0000 in
F	4.75 in
H[1]	12.8125 in
Oil Level K	2.1875 in
L[2]	8.375 in
Y	2.5781 in
No. of Base Bolts Required	4
Bolt Hole Length	1.75 in
Bolt Hole Width	1.125 in
Size of Base Bolts Required	1.125 in
Locknut	AN30
Lockwasher	W30
Housing Only[3]	SDAF230
Stabilizing Ring 1 Req'd[4]	SR-30-0
Triple Seal 2 Req'd at S-2	LER151
Triple Seal 2 Req'd at S-3	LER134
Assembly Weight	201.000 lb

[1] Tolerance -0 to + 0.4 mm (-0 to +1/64 in)

[2] Tolerance -0 to + 0.4 mm (-0 to +1/64 in)

[3] "Housing Only" includes: cap, base, cap bolts, triple ring seals and stabilizing ring as required. When ordering non-standard housing only specify the shaft size.

[4] Stabilizing ring is used for fixed (FX) block; do not use for float (FL) mounting.

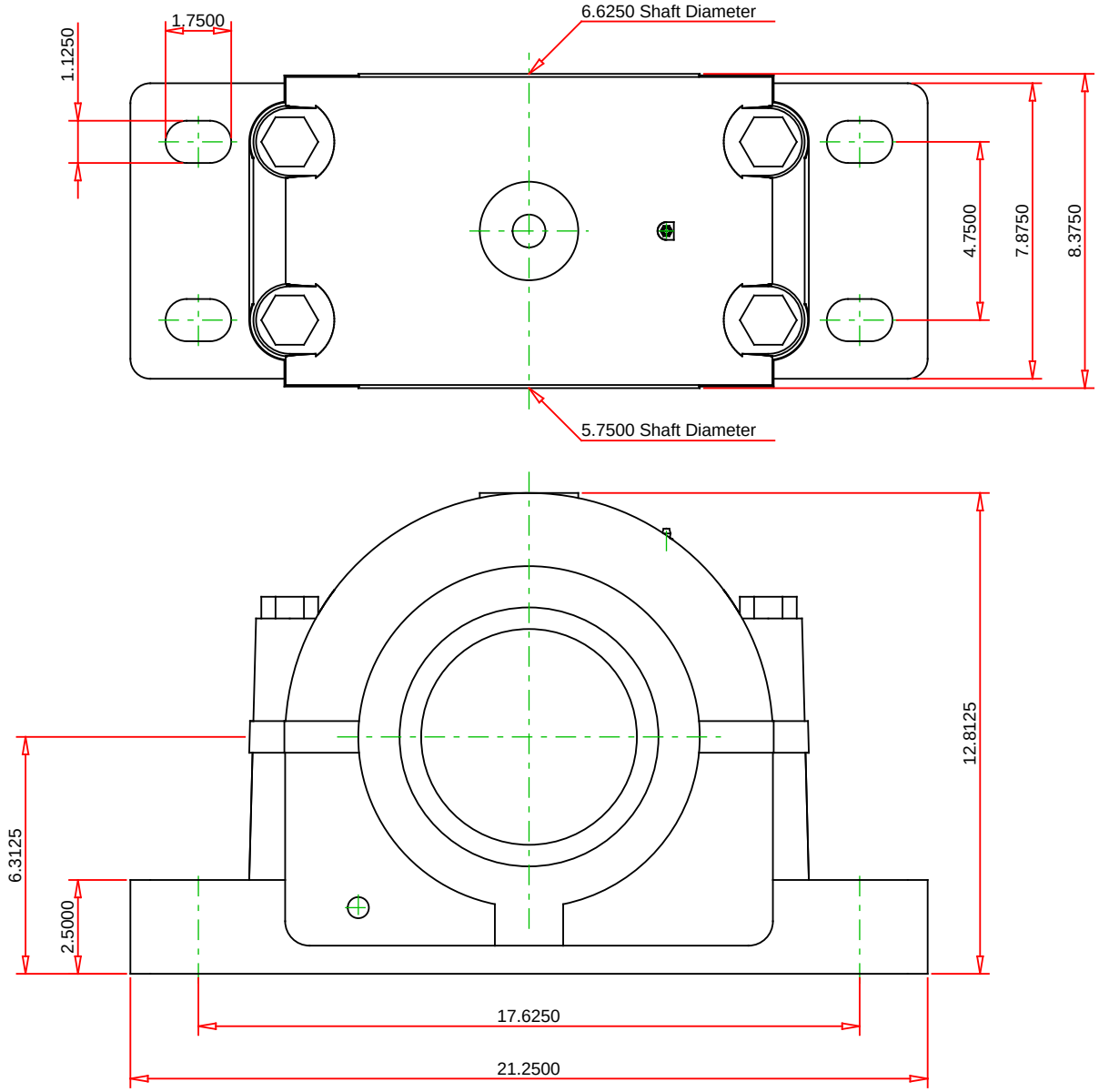

IMPERIAL UNITS

Housing	SDAF230
Bearing	22230
Triple Seal at S-2	LER151
Triple Seal at S-3	LER134
Stabilizing Ring	SR-30-0
Locknut	AN30
Lockwasher	W30
Bolt Hole Spacing Max.	18.2500
Bolt Hole Spacing Min.	17.0000

TIMKEN®

THE TIMKEN COMPANY
NORTH CANTON, OHIO USA

SDAF 22230
PILLOW BLOCK SDAF222 AND SDAF223

Every reasonable effort has been made to ensure the accuracy of the information contained in this writing, but no liability is accepted for errors, omissions or for any other reason.

FOR DISCUSSION ONLY