The Timken Company
4500 Mt Pleasant St. NW
N. Canton, OH 44720
Phone: (234) 262-3000
E-Mail: CustomerCAD@timken.com • **Web site:** www.timken.com

Timken Part Number MB 15, Metric Lockwasher

No. AW 00 - AW 40 also available for 304 stainless steel.
Note: The specifications of AW can be applied for MB.

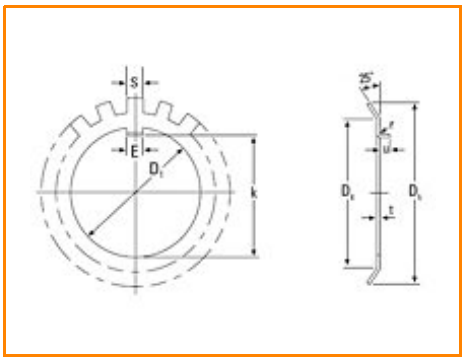

Specifications

D_1	75 mm
k	71.5 mm
E	8 mm
t	1.5 mm
S^1	8.0 mm
D_4	90 mm
D_5	104 mm
r	1.2 mm
u	4.0 mm
No. of Tangs	19
Locknut	KM 15

Weight per 100 pieces	3.560 Kg

[1] Tolerance -0 to + 0.4 mm (-0 to +1/64 in)