The Timken Company
4500 Mt Pleasant St. NW
N. Canton, OH 44720
Phone: (234) 262-3000
E-Mail: CustomerCAD@timken.com • **Web site:** www.timken.com

Timken Part Number GN103KRRB, Fafnir® Eccentric Locking Collar Ball Bearings



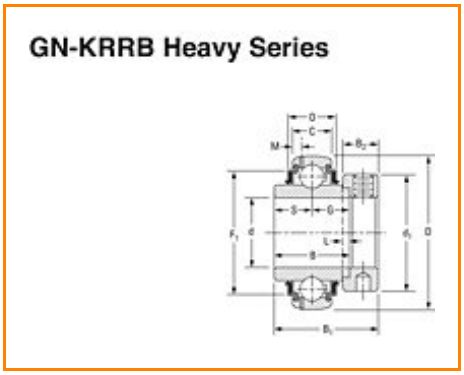

Specifications | Dimensions | Basic Load Ratings

Specifications

Bore Size d	1 3/16 in 30.2 mm
Bore Type	Cylindrical bore
Bearing Type	Ball Bearing
Seal Type	Shroud Seal
Material	Bearing Steel
Lubrication Type	Relubricatable
O.D. Type	Spherical OD
Dimension M	0.142 in 3.61 mm
Dimension B1	1.969 in 50 mm

Dimension B2	0.689 in 17.5 mm
Series	Medium-Duty
Weight	0.500 lb 0.200 Kg
Sub Series	GN..KRRB

Dimensions

Outside Diameter D	2.835 in 72.000 mm
Inside Ring Width B	36.51 mm 1.437 in
Outside Ring Width C	20.000 mm 0.787 in
Radius r	0.6 mm 0.024 in
Center of Bearing from End S	17.5 mm 0.689 in
Dimension S1	32.5 mm 1.280 in
Set Screw Size	5/16-18
Number of Set Screws	2
Angle between Set Screws	90 º

Basic Load Ratings

Static Load Rating	3550 lbf 15600 N

Dynamic Load Rating	7500 lbf 33500 N

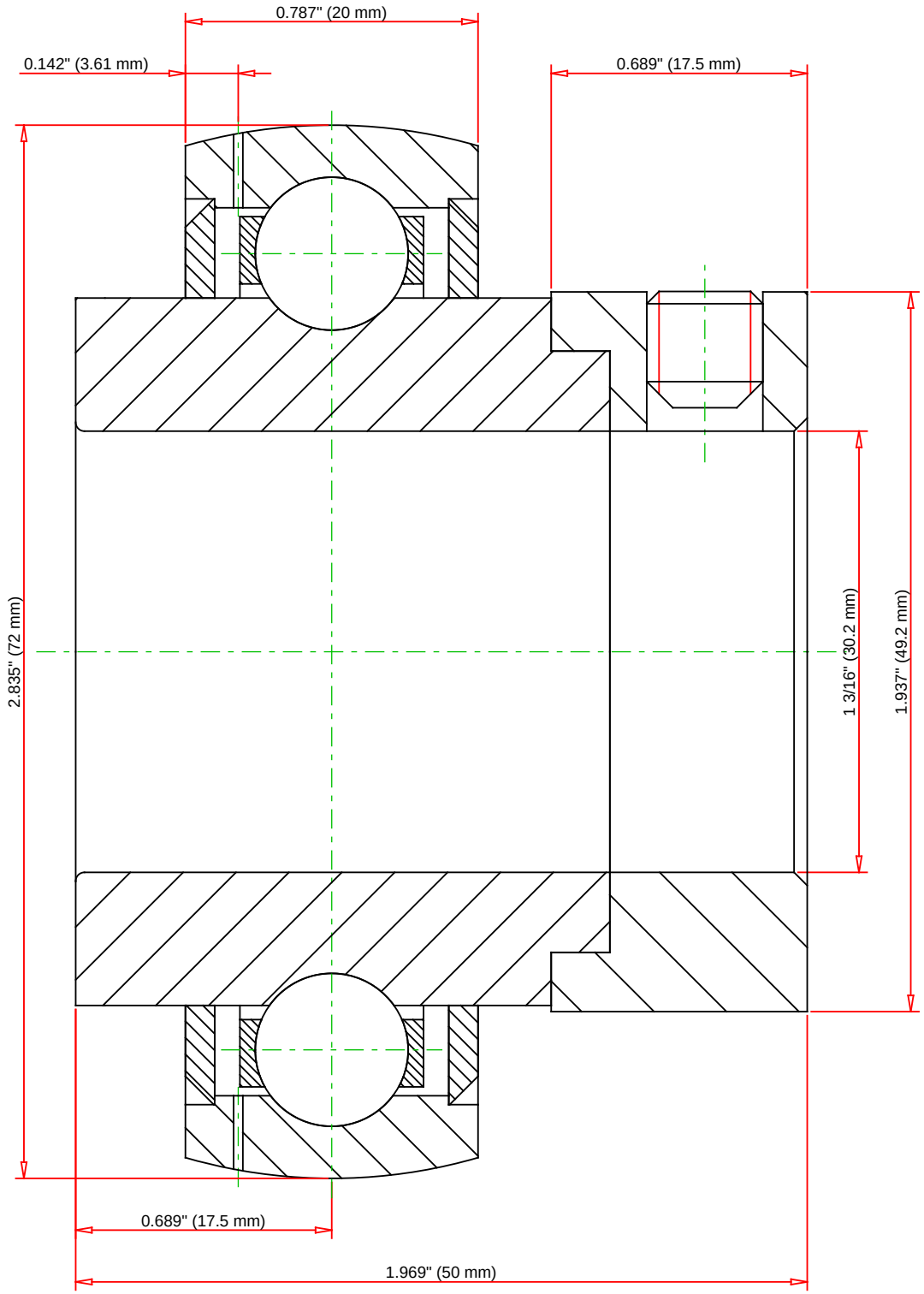

Weight	0.5 lb	0.2 kg

TIMKEN®

THE TIMKEN COMPANY
NORTH CANTON, OHIO USA

GN103KRRB

Fafnir® Eccentric Locking Collar Ball Bearings

Basic Load Ratings - C_r	7500 lbf	33500 N
Load Ratings - C_{0r}	3550 lbf	15600 N

Every reasonable effort has been made to ensure the accuracy of the information contained in this writing, but no liability is accepted for errors, omissions or for any other reason.

FOR DISCUSSION ONLY