The Timken Company
4500 Mt Pleasant St. NW
N. Canton, OH 44720
Phone: (234) 262-3000
E-Mail: CustomerCAD@timken.com • **Web site:** www.timken.com

Timken Part Number H3136, Metric H Adapter Sleeve

- Safe and effective tapered bore bearing assembly.
- Includes mounting sleeve, locknut and lockwasher or lockplate.
- Other dimensions may be available, consult your Timken sales representative.

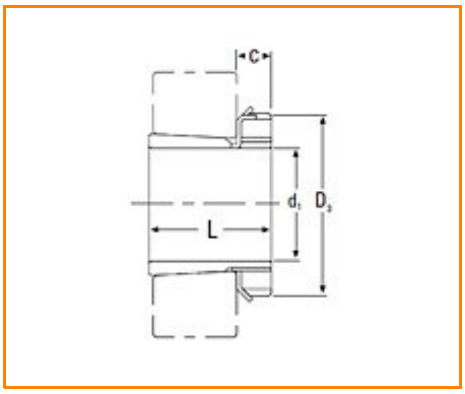

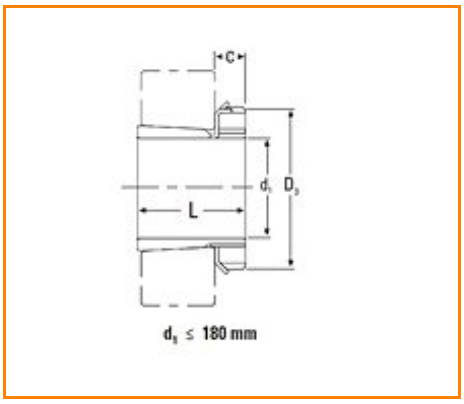

Specifications

d1	160.00 mm
L[1]	131.00 mm
C	30 mm
G	M180x3
D_3	230 mm
Locknut	KM36
Lockwasher and Lockplates	MB36
Appropriate Hydraulic Nut	HMV36

[1] Tolerance -0 to + 0.4 mm (-0 to +1/64 in)